VERANO®

BY MDL SOLUTIONS

COMPACT LOWER VOLTAGE FAN COILS AND HYDRONIC HEAT | MDLSOLN.COM

VKN

MDL Trench Fan coil heaters

2018

Productinformation

VKN1 - 2.5 in height

VKN1 - 3.5 in height

VKN1 - Specification details

VKN5 - Specification details

How to select the correct heater

Electric connection (wiring) diagram

Installation and maintenance manual for VKN fan assisted heaters

FORCED CONVECTION

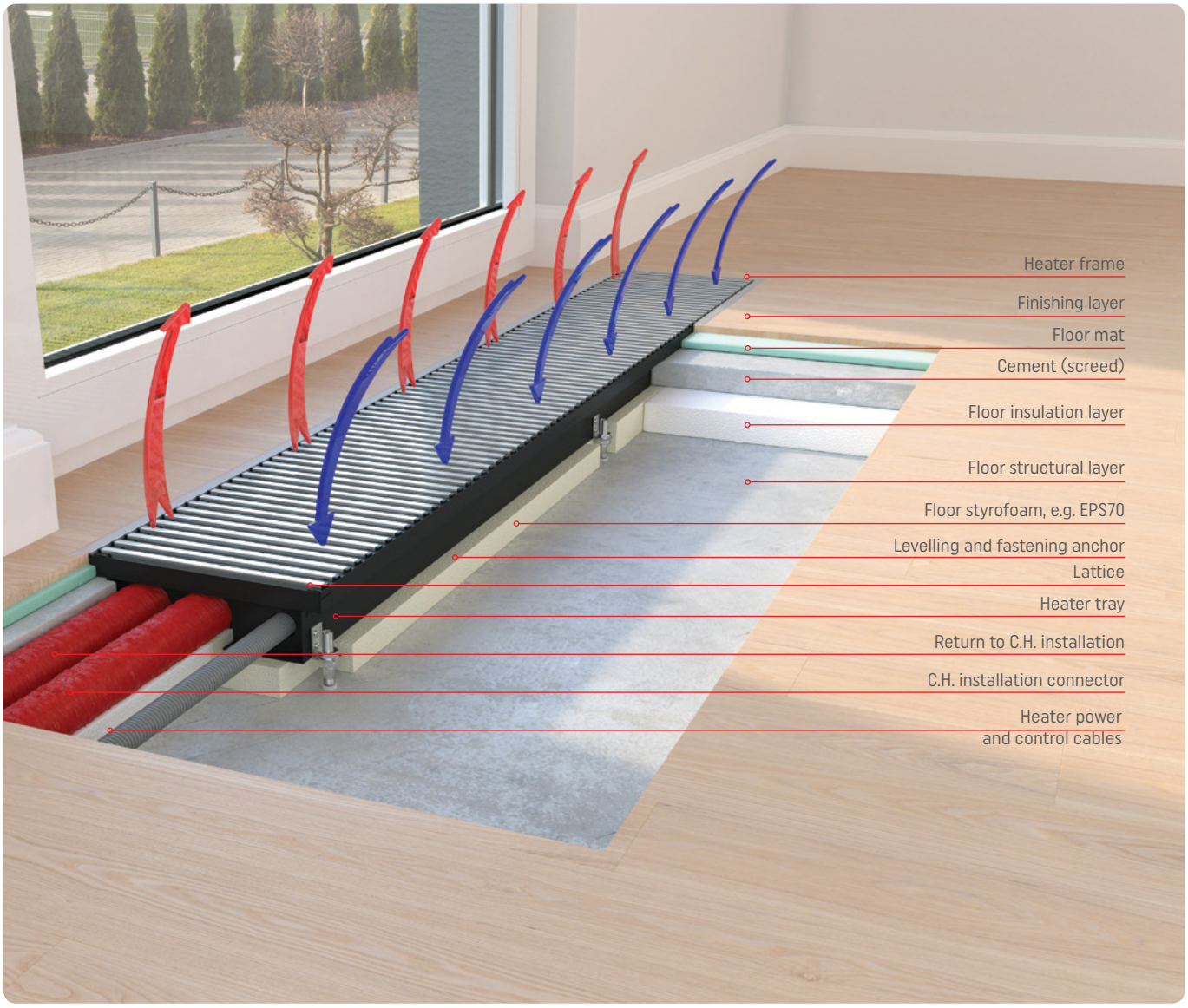

OPERATING PRINCIPLE OF FORCED CONVECTION TRENCH HEATERS

Convection heating systems utilize the phenomenon of heat absorption by air particles flowing through heat exchanger. The difference in densities of cold and heated air causes a delicate draft that initiates the airflow in the exchanger.

This principle is used in trench heaters, that is low mass, low water capacity and low heat inertia convection heaters.

These heaters are considered simplest in setting and allow for shortest reaction times for changes in room heat demand.

Use of fan allows to increase the airstream flowing through the trench heater exchanger, which in turn results in higher dynamics of heat transfer process and substantial increase of heating power of the trench heater.

The adjustment of fan heater is achieved by simultaneous change of fan speed and the light of the thermostatic valve with use of actuator fitted on that valve. The fan and the actuator are controlled by room controller that can be programmed according to user preferences.

The automatic adjustment of heater operation that initiates the heating mode only if it is required, allows for significant energy savings and thus lowering of operating cost of the whole building.

The fans used in MDL Verano productsare equipped with low-voltage EC motors that allow for silent, safe and easy adjustment of heater.

You will find details pertaining to the construction of installation in the "Installing and using VKN heaters" section.

OUR ADVANTAGES

HIGHLY EFFICIENT HEAT EXCHANGER

Research and development works allowed us to optimise sizes for heat exchangers. As the result of that we have increased the product heating output by 10 to 20%, depending of the unit length and height.

TRAY POSITION ADJUSTMENT

Adjustable legs allow for easy, single- stage adjustment of tray installation height in the trench, and also its easy levelling.

DEDICATED CONTROL SYSTEM

Modern room controllers allow for full control of heater operations.

MODERN EC FANS

Using 24V DC fan motors will provide much quicker and quiet air distribution, yet the entire product is safe and hassle free for install and maintenance.

WIRELESS CONTROL

Now it is a child's play to precisely control the heaters with use of your mobile or tablet and our free application.

TOOLS FOR DESIGNERS

We offer full product support, i.e. knowledge base by dedicated CPD seminars, or access to BIM drawings and libraries at the project design stage.

TECHNICAL ADVICE

We provide aid and expert advice throughout the investment project, from the design stage to the completion of construction.

SPECIAL DESIGNS

We can make our heaters fit to provide heat in rooms with different shapes and requirements.

WIDE SELECTION OF FINISHES

We provide a wide selection of types and colours of grilles and frames. Arrange your interior as you wish.

CONFIRMED QUALITY

Years of thorough research, analyses and measurements, including those in the Warsaw, Cracow and Lublin Universities of Technology, Polish Academy of Sciences and own research we developed high class heating and heating-cooling devices.

They increase the energy efficiency of hot / cold air supply and significantly increase the efficiency of low-temperature systems that they work with.

The perfect technical parameters of Verano products were also confirmed in the tests conducted in the HEATEST s.r.o. notified body and the Heizung – Lüftung – Klimatechnik Stuttgart at the Institut für GebaudeEnergetik Universität Stuttgart.
Verano heaters are designed for heating both residential (detached homes and apartment buildings), office, service, retail, hotel, sacral spaces; sports objects, swimming pools and many others.

The choice of convector heaters is recommended to designers utilizing computer software for designing C.H. installation.

A correct technical design secures optima choice of heater sizes and other devices, correct construction and hydraulic adjustment of heating installation, which influences future faultless and energy-saving use. Verano heaters hold all the required EU documents:

- Technical approval and declaration of operating characteristics pursuant to the EN 16430 Standard,
- PZH hygiene attest.

RESEARCH AND DEVELOPMENT

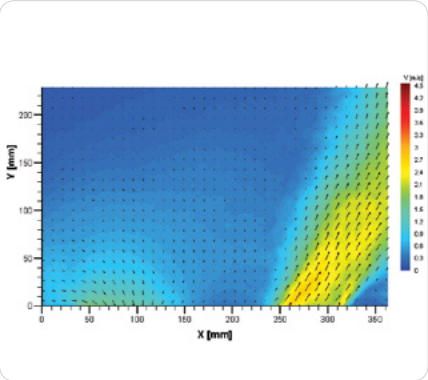

The airspeed analysis is one of the basic parameters that influence the heating power of the device. The measurement of distribution of airspeeds allowed us to eliminate detrimental phenomena occurring in operation of typical trench heaters, i.e. the appearance of zones with very low airspeed and the return suction of already heated air.

The VKN series trench heaters are characterized by airflow formed by specially designed injectors. This allows to reduce the airspeed in the zone where people are staying to generally acceptable levels. This in turn largely reduces the risk of discomfort connected with airflow, so called "draft".

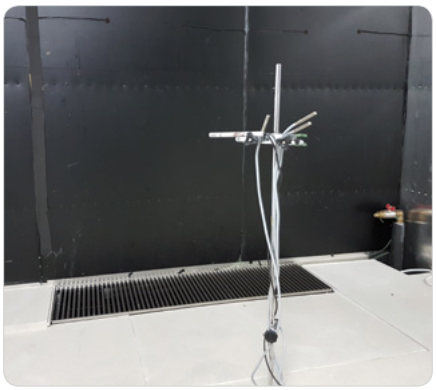

All R&D studies that concern our VKN trench heaters are conducted in the specially constructed and prepared climatic chamber that ensures that all compliance standards in according to BS/EN 16430-2 are rigorously met.

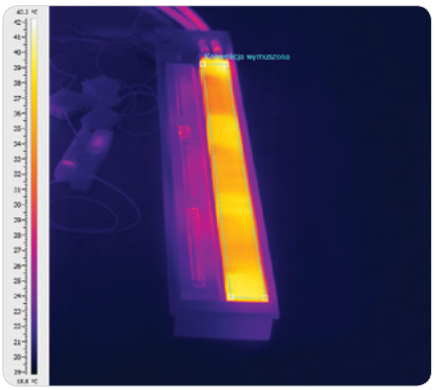

Based on the recently conducted R&D works, there is an evidence in place, that VKN series trench heaters have been recognised for high efficiency at rated heating capacity. The temperature pattern at the surface of the heat exchanger that has been thoroughly examined, confirmed, in fact, the effectiveness for transferring the heat from the outer layer of the heat exchanger to the passing airflow in the room.

VKN1 HEIGHT 2.5 inch

EQUIPMENT

STANDARD EQUIPMENT:

- tray (cover) made of hot-dip zinc-magnesium coated steel, RAL 9005 black powder coated,
- highly efficient heating part – copper-aluminium heat exchanger, Black powder coat with bleeding valve,
- modern fan with silent and efficient 24V DC motor
- cover for connector chamber,
- fan guard
- threaded ½" NPT or optional other
- assembly struts,
- fastening anchors,
- tray position adjustment system.

ADDITIONAL EQUIPMENT:

- tray (cover) powder coated in any of the RAL palette colours,
- Type L or F natural or anodized aluminium decorative flame,
- aesthetic grille,
- assembly cover for protection of heater during transport, handling and installation.
- assembly kit for raised floor,
- temperature sensor with adjustable control
- adjustable edge of heater tray,
- heater tray protective film,
- foil sleeve for heat exchanger.

DIMENSIONS

DIMENSIONS	[inch]
Trench height	2.55
Trench width	5.5, 6.7
Trench length (Lk)	37-1/2 ÷ 78-3/4

Non-standard (NS) length heaters can be made on order.

EXAMPLE OF ORDER CODE:

VKN1-6,5/14/Lk (L/P)

Trench length
Lk [cm]

Connection side
L- Left
P - Right

VERANO BY MDL SOLUTIONS
COMPACT LOWER VOLTAGE FAN COILS AND HYDRONIC HEAT | MDLSOLN.COM

VKN1 HEIGHT Length

Non-standard (NS) length heaters can be made to order. Please consult with MDL Solutions

37-1/2

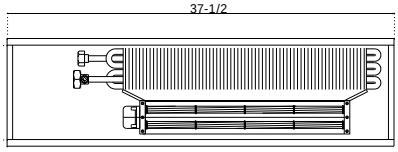

43-1/3

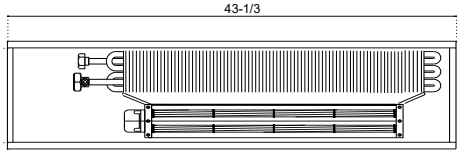

49-1/4.3

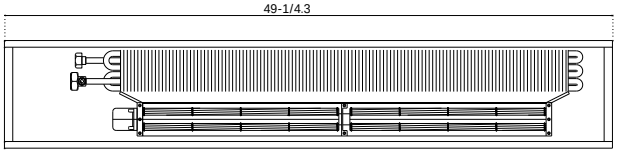

57-1/8

65

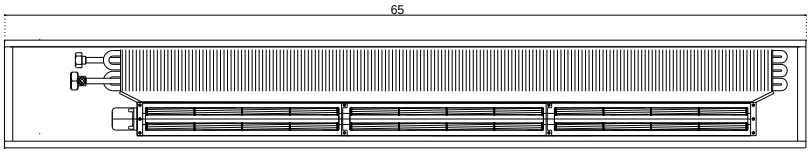

70-3/4

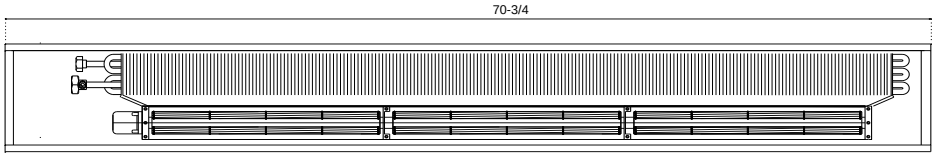

78-3/4

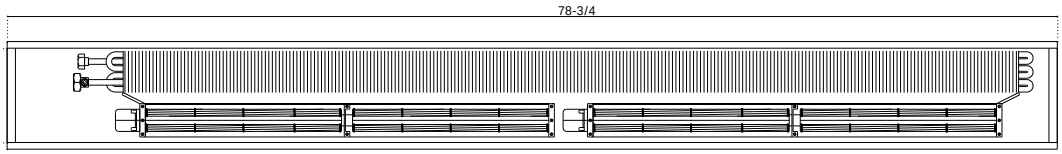

HEIGHT 2.5 inch - 24V Low Voltage Trench Fan coil

VKN1-6,5/14/Lk (L/P)

« ORDER CODE

DIMENSIONS	UNIT [inch]
Trench height	2.55
Trench width	**5.5**
Grille width (Bk)	6.4
Trench length (Lk)	37-1/2 ÷ 78-3/4
CONNECTIONS	**TYPE**
Connectors	½" NPT Threads
Connection side	Left (L) standard, Right (R) optional
ACCESSORIES	**TYPE**
Grille H=18 mm	Roll-up / linear / modular
Frames	L or F
Additional accessories	Assembly cover, assembly set for raised floor, bimetal temperature sensor, adjustable edge

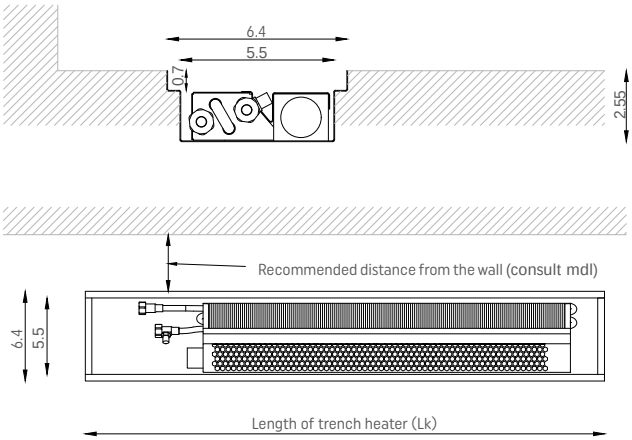

Trench length	Operating mode	Heating°F	Airflow	Flowrate	Sound pressure level	Sound power level	Electric power demand	Current	Number of fan motors
Lk [inch]	[-]	140/120 Φ [BTU/h]	P[CFM]	q[usGPM]	Lp [dB(A)]	Lw [dB(A)]	P [W]	I [A]	[-]
37-1/2	Min	786	25	0.08	<18	<26	1,0	0,04	1
	Med	1938	44	0.19	18	26	2,2	0,09	
	Max	2888	60	0.29	28	36	5,3	0,22	
	Design	4182	100	0.42	40	48	18,0	0,75	
43-1/3	Min	921	30	0.09	<18	<26	1,0	0,04	1
	Med	2239	60	0.22	18	26	2,4	0,10	
	Max	3198	140	0.31	28	36	6,0	0,25	
	Design	4909	175	0.49	40	48	20,7	0,86	
49-1/4	Min	1182	47	0.11	<18	<26	1,0	0,04	1
	Med	2874	95	0.28	18	26	2,7	0,11	
	Max	4352	205	0.43	28	36	7,2	0,30	
	Design	6298	255	0.63	40	48	26,4	1,10	
57-1/8	Min	1369	60	0.14	<18	<26	1,2	0,05	1
	Med	3328	120	0.33	18	26	2,9	0,12	
	Max	5039	275	0.50	28	36	8,2	0,34	
	Design	7292	345	0.73	40	48	30,8	1,28	
65	Min	1652	78	0.16	<18	<26	2,0	0,08	2
	Med	4021	155	0.40	21	29	4,4	0,18	
	Max	6090	345	0.61	31	39	10,6	0,44	
	Design	8811	425	0.89	43	51	36,0	1,50	
70-3/4	Min	1929	100	0.19	<18	<26	2,0	0,08	2
	Med	4690	200	0.47	21	29	4,6	0,19	
	Max	7104	400	0.71	31	39	11,3	0,47	
	Design	10283	500	1.02	43	51	38,7	1,61	
78-3/4	Min	2048	126	0.20	<18	<26	2,0	0,08	2
	Med	4987	251	0.49	21	29	4,8	0,20	
	Max	7555	495	0.75	31	39	12,5	0,52	
	Design	10931	576	1.09	43	51	44,4	1,85	

- Normative heating power output [BTU/h] compliant to EN-16430 for room temperature of Θ = 68°F.
- Control voltages for the respective modes of operation: Min – 2 V, Med – 4 V, Max – 6 V, Design – 10 V.
- Min, Med, Max fan speeds are for continuous operations, the Design for fast sizing PSU of rooms.
- Sound power level according to ISO-3745 standard, sound pressure level for a distance of 2m in a room of a total volume of 100 m³ and reverb time of 0.5 s assuming room dampening of 8 dB(A).

VERANO BY MDL SOLUTIONS
COMPACT LOWER VOLTAGE FAN COILS AND HYDRONIC HEAT | MDLSOLN.COM

HEIGHT 2.55 inch - 24V Low Voltage Trench Fan coil

VKN1-6,5/17/Lk (L/P)

ORDER CODE

DIMENSIONS	UNIT [inch]
Trench height	2.55
Trench width	6.7
Grille width (Bk)	7.63
Trench length (Lk)	37-1/2 ÷ 78-3/4
CONNECTIONS	**TYPE**
Connectors	½" NPT Threads
Connection side	Left (L) standard, Right (R) optional
ACCESSORIES	**TYPE**
Grille H=18 mm	Roll-up / linear / modular
Frames	L or F
Additional accessories	Assembly cover, assembly set for raised floor, bimetal temperature sensor, adjustable edge

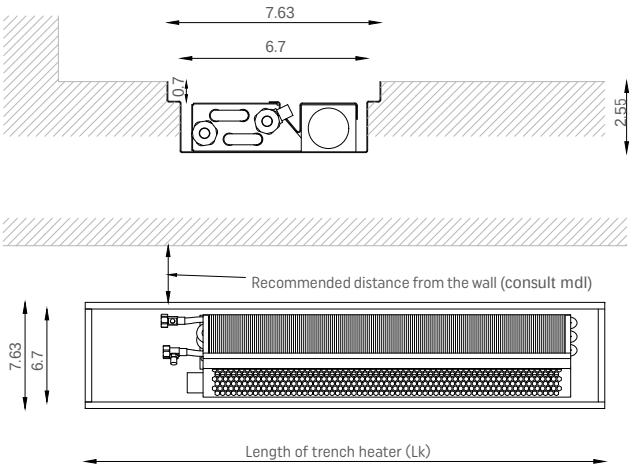

Trench length	Operating mode	Heating°F	Airflow	Flowrate	Sound pressure level	Sound power level	Electric power demand	Current	Number of fan motors
Lk [inch]	[-]	140/120 Φ [BTU/h]	P[CFM]	q[usGPM]	Lp [dB(A)]	Lw [dB(A)]	P [W]	I [A]	[-]
37-1/2	Min	786	25	0.08	<18	<26	1,0	0,04	1
	Med	1938	44	0.19	18	26	2,2	0,09	
	Max	2888	60	0.29	28	36	5,3	0,22	
	Design	4182	100	0.42	40	48	18,0	0,75	
43-1/3	Min	921	30	0.09	<18	<26	1,0	0,04	1
	Med	2239	60	0.22	18	26	2,4	0,10	
	Max	3198	140	0.31	28	36	6,0	0,25	
	Design	4909	175	0.49	40	48	20,7	0,86	
49-1/4	Min	1182	47	0.11	<18	<26	1,0	0,04	1
	Med	2874	95	0.28	18	26	2,7	0,11	
	Max	4352	205	0.43	28	36	7,2	0,30	
	Design	6298	255	0.63	40	48	26,4	1,10	
57-1/8	Min	1369	60	0.14	<18	<26	1,2	0,05	1
	Med	3328	120	0.33	18	26	2,9	0,12	
	Max	5039	275	0.50	28	36	8,2	0,34	
	Design	7292	345	0.73	40	48	30,8	1,28	
65	Min	1652	78	0.16	<18	<26	2,0	0,08	2
	Med	4021	155	0.40	21	29	4,4	0,18	
	Max	6090	345	0.61	31	39	10,6	0,44	
	Design	8811	425	0.89	43	51	36,0	1,50	
70-3/4	Min	1929	100	0.19	<18	<26	2,0	0,08	2
	Med	4690	200	0.47	21	29	4,6	0,19	
	Max	7104	400	0.71	31	39	11,3	0,47	
	Design	10283	500	1.02	43	51	38,7	1,61	
78-3/4	Min	2048	126	0.20	<18	<26	2,0	0,08	2
	Med	4987	251	0.49	21	29	4,8	0,20	
	Max	7555	495	0.75	31	39	12,5	0,52	
	Design	10931	576	1.09	43	51	44,4	1,85	

- Normative heating power output [BTU/h] compliant to EN-16430 for room temperature of Θ = 68°F.
- Control voltages for the respective modes of operation: Min – 2 V, Med – 4 V, Max – 6 V, Design – 10 V.
- Min, Med, Max fan speeds are for continuous operations, the Design for sizing of PSU for rooms.
- Sound power level according to ISO-3745 standard, sound pressure level for a distance of 2m in a room of a total volume of 100 m^3 and reverb time of 0.5 s assuming room dampening of 8 dB(A).

CORRECTIVE COEFFICIENTS FOR 2.55 inch HIGH VKN1 HEATERS

Corrective coefficients for selection of heating power of 2.55inch high type VKN1 heaters, for parameters different than 167/150/68°F.

Heating fluid temperature [°C]		Room temperature θ_i [°C]						
t_z	t_p	5	8	12	16	20	24	32
90	85	1,651	1,591	1,511	1,431	1,351	1,270	1,110
	80	1,601	1,541	1,461	1,381	1,301	1,220	1,060
	75	1,551	1,491	1,411	1,331	1,250	1,170	1,010
	70	1,501	1,441	1,361	1,280	1,200	1,120	0,960
85	80	1,551	1,491	1,411	1,331	1,250	1,170	1,010
	75	1,501	1,441	1,361	1,280	1,200	1,120	0,960
	70	1,451	1,391	1,311	1,230	1,150	1,070	0,910
	65	1,401	1,341	1,260	1,180	1,100	1,020	0,860
80	75	1,451	1,391	1,311	1,230	1,150	1,070	0,910
	70	1,401	1,341	1,260	1,180	1,100	1,020	0,860
	65	1,351	1,290	1,210	1,130	1,050	0,970	0,810
	60	1,301	1,240	1,160	1,080	1,000	0,920	0,760
75	70	1,351	1,290	1,210	1,130	1,050	0,970	0,810
	65	1,301	1,240	1,160	1,080	**1,000**	0,920	0,760
	60	1,250	1,190	1,110	1,030	0,950	0,870	0,710
	55	1,200	1,140	1,060	0,980	0,900	0,820	0,660
70	65	1,250	1,190	1,110	1,030	0,950	0,870	0,710
	60	1,200	1,140	1,060	0,980	0,900	0,820	0,660
	55	1,150	1,090	1,010	0,930	0,850	0,770	0,610
	50	1,100	1,040	0,960	0,880	0,800	0,720	0,560
65	60	1,150	1,090	1,010	0,930	0,850	0,770	0,610
	55	1,100	1,040	0,960	0,880	0,800	0,720	0,560
	50	1,050	0,990	0,910	0,830	0,750	0,670	0,509
	45	1,000	0,940	0,860	0,780	0,700	0,620	0,459
60	55	1,050	0,990	0,910	0,830	0,750	0,670	0,509
	50	1,000	0,940	0,860	0,780	0,700	0,620	0,459
	45	0,950	0,890	0,810	0,730	0,650	0,570	0,409
	40	0,900	0,840	0,760	0,680	0,600	0,519	0,359
55	50	0,950	0,890	0,810	0,730	0,650	0,570	0,409
	45	0,900	0,840	0,760	0,680	0,600	0,519	0,359
	40	0,850	0,790	0,710	0,630	0,550	0,469	0,309
	35	0,800	0,740	0,660	0,580	0,499	0,419	0,259
50	45	0,850	0,790	0,710	0,630	0,550	0,469	0,309
	40	0,800	0,740	0,660	0,580	0,499	0,419	0,259
	35	0,750	0,690	0,610	0,529	0,449	0,369	0,210
45	40	0,750	0,690	0,610	0,529	0,449	0,369	0,210
	35	0,700	0,640	0,560	0,479	0,399	0,319	0,160
40	35	0,650	0,590	0,509	0,429	0,349	0,269	0,110
	30	0,600	0,540	0,459	0,379	0,299	0,220	0,060
35	30	0,550	0,489	0,409	0,329	0,249	0,170	0,010

Corrective coefficients for selection of heating power that include the type of grille.

TYPE OF GRATING	AIRFLOW	CORRECTIVE COEFFICIENT
Roll-up aluminium, double t-bar	67%	1,00
Roll-up aluminium, closed profile	61%	0,98
Roll-up wooden grille	52%	0,97
Modular grille	63%	0,99
Linear grille	58%	0,98
Stainless steel grille	62%	0,99

VKN1 HEIGHT 3.5 inch

EQUIPMENT

STANDARD EQUIPMENT:

- tray (cover) made of hot-dip zinc-magnesium coated steel, RAL 9005 black powder coated,
- highly efficient heating part – copper-aluminium heat exchanger, Black powder coat with bleeding valve,
- modern fan with silent and efficient 24V DC motor
- cover for connector chamber,
- fan cover, so called grille, with airstream nozzles,
- threaded ½" half-union connectors
- assembly struts,
- fastening anchors,
- tray position adjustment system.

ADDITIONAL EQUIPMENT:

- tray (cover) powder coated in any of the RAL palette colours,
- Type L or F natural or anodized aluminium decorative flame,
- aesthetic grille,
- assembly cover for protection of heater during transport, handling and installation.
- assembly kit for raised floor,
- bimetal temperature sensor,
- adjustable edge of heater tray,
- heater tray protective film,
- foil sleeve for heat exchanger.

DIMENSIONS

DIMENSIONS	[inch]
Trench height	3.5
Trench width	5.5, 6.7
Trench length (Lk)	37-1/2 ÷ 78-3/4

Non-standard (NS) length heaters can be made on order.

EXAMPLE OF ORDER CODE:

VKN1-9/14/Lk (L/P)

Trench length
Lk [cm]

Connection side
L- Left
P - Right

HEIGHT 3.5 inch - 24V Low Voltage Trench Fan coil

VKN1-9/14/Lk (L/P)

ORDER CODE

DIMENSIONS	UNIT [inch]
Trench height	3.5
Trench width	**5.5**
Grille width (Bk)	6.4
Trench length (Lk)	37-1/2 ÷ 78-3/4
CONNECTIONS	**TYPE**
Connectors	½" NPT Threads
Connection side	Left (L) standard, Right (R) optional
ACCESSORIES	**TYPE**
Grille H=18 mm	Roll-up / linear / modular
Frames	L or F
Additional accessories	Assembly cover, assembly set for raised floor, bimetal temperature sensor, adjustable edge

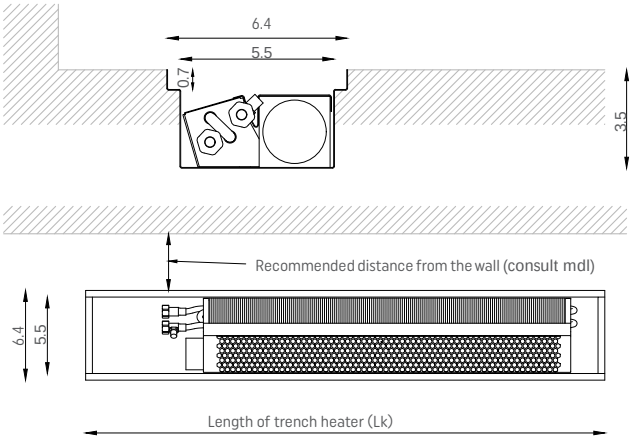

Trench length	Operating mode	Heating°F	Airflow	Flowrate	Sound pressure level	Sound power level	Electric power demand	Current	Number of fan motors
Lk [inch]	[-]	140/120 Φ [BTU/h]	P[CFM]	q[usGPM]	Lp [dB(A)]	Lw [dB(A)]	P [W]	I [A]	[-]
37-1/2	Min	786	25	0.08	<18	<26	1,0	0,04	1
	Med	1938	44	0.19	18	26	2,2	0,09	
	Max	2888	60	0.29	28	36	5,3	0,22	
	Design	4182	100	0.42	40	48	18,0	0,75	
43-1/3	Min	921	30	0.09	<18	<26	1,0	0,04	1
	Med	2239	60	0.22	18	26	2,4	0,10	
	Max	3198	140	0.31	28	36	6,0	0,25	
	Design	4909	175	0.49	40	48	20,7	0,86	
49-1/4	Min	1182	47	0.11	<18	<26	1,0	0,04	1
	Med	2874	95	0.28	18	26	2,7	0,11	
	Max	4352	205	0.43	28	36	7,2	0,30	
	Design	6298	255	0.63	40	48	26,4	1,10	
57-1/8	Min	1369	60	0.14	<18	<26	1,2	0,05	1
	Med	3328	120	0.33	18	26	2,9	0,12	
	Max	5039	275	0.50	28	36	8,2	0,34	
	Design	7292	345	0.73	40	48	30,8	1,28	
65	Min	1652	78	0.16	<18	<26	2,0	0,08	2
	Med	4021	155	0.40	21	29	4,4	0,18	
	Max	6090	345	0.61	31	39	10,6	0,44	
	Design	8811	425	0.89	43	51	36,0	1,50	
70-3/4	Min	1929	100	0.19	<18	<26	2,0	0,08	2
	Med	4690	200	0.47	21	29	4,6	0,19	
	Max	7104	400	0.71	31	39	11,3	0,47	
	Design	10283	500	1.02	43	51	38,7	1,61	
78-3/4	Min	2048	126	0.20	<18	<26	2,0	0,08	2
	Med	4987	251	0.49	21	29	4,8	0,20	
	Max	7555	495	0.75	31	39	12,5	0,52	
	Design	10931	576	1.09	43	51	44,4	1,85	

- Normative heating power output [BTU/h] compliant to EN-16430 for room temperature of Θ = 68°F.
- Control voltages for the respective modes of operation: Min – 2 V, Med – 4 V, Max – 6 V, Design – 10 V.
- Min, Med, Max fan speeds are for continuous operations, the Design for fast sizing PSU of rooms.
- Sound power level according to ISO-3745 standard, sound pressure level for a distance of 2m in a room of a total volume of 100 m³ and reverb time of 0.5 s assuming room dampening of 8 dB(A).

HEIGHT 3.5 inch

VKN1-9/17/Lk (L/P)

ORDER CODE

DIMENSIONS	UNIT [inch]
Trench height	3.5
Trench width	**6.4**
Grille width (Bk)	7.6
Trench length (Lk)	37.5 ÷78.750
CONNECTIONS	**TYPE**
Connectors	½" NPT
Connection side	Left (L) standard, Right (R) optional
ACCESSORIES	**TYPE**
Grille H=18 mm	Roll-up / linear / modular
Frames	L or F
Additional accessories	Assembly cover, assembly set for raised floor, bimetal temperature sensor, adjustable edge

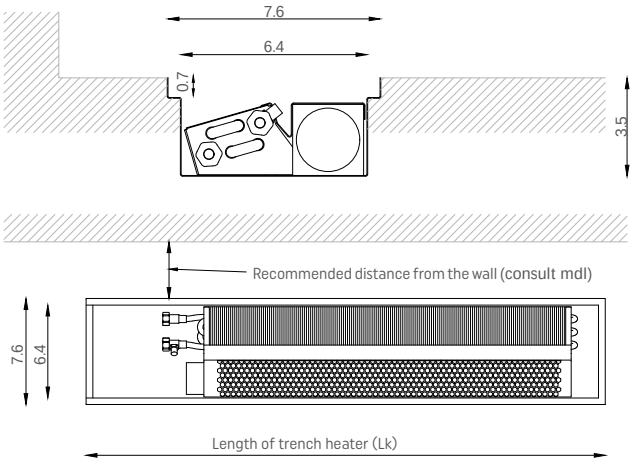

Trench length	Operating mode	Heating°F	Airflow	Flowrate	Sound pressure level	Sound power level	Electric power demand	Current	Number of fan motors
Lk [inch]	[-]	140/120 Φ [BTU/h]	P[CFM]	q[usGPM]	Lp [dB(A)]	Lw [dB(A)]	P [W]	I [A]	[-]
37-1/2	Min	1403	25	0.14	<18	<26	1,0	0,04	1
	Med	3349	44	0.33	18	26	2 , 2	0,09	
	Max	5011	60	0.50	28	36	5,3	0,22	
	Design	7125	100	0.71	40	48	18,0	0,75	
43-1/3	Min	1645	30	0.16	<18	<26	1,0	0,04	1
	Med	3932	60	0.39	18	26	2,4	0,10	
	Max	5885	140	0.59	28	36	6,0	0,25	
	Design	8364	175	0.83	40	48	20,7	0,86	
49-1/4	Min	2113	47	0.21	<18	<26	1,0	0,04	1
	Med	5045	95	0.50	18	26	2,7	0,11	
	Max	7551	205	0.76	28	36	7,2	0,30	
	Design	10773	255	1.07	40	48	26,4	1,10	
57-1/8	Min	2447	60	0.24	<18	<26	1,2	0,05	1
	Med	5841	120	0.58	18	26	2,9	0,12	
	Max	8743	275	0.87	28	36	8,2	0,34	
	Design	12423	345	1.24	40	48	30,8	1,28	
65	Min	2802	78	0.28	<18	<26	2,0	0,08	2
	Med	6688	155	0.66	21	29	4,4	0,18	
	Max	10009	345	1.00	31	39	10,6	0,44	
	Design	14229	425	1.42	43	51	36,0	1,50	
70-3/4	Min	3294	100	0.33	<18	<26	2,0	0,08	2
	Med	7865	200	0.79	21	29	4,6	0,19	
	Max	11771	400	1.17	31	39	11,3	0,47	
	Design	16732	500	1.67	43	51	38,7	1,61	
78-3/4	Min	3513	126	0.35	<18	<26	2,0	0,08	2
	Med	8384	251	0.83	21	29	4,8	0,20	
	Max	12549	495	1.25	31	39	12,5	0,52	
	Design	17838	576	1.73	43	51	44,4	1,85	

- Normative heating power output [BTU/h] compliant to EN-16430 for room temperature of Θ = 68°F.
- Control voltages for the respective modes of operation: Min – 2 V, Med – 4 V, Max – 6 V, Design – 10 V.
- Min, Med, Max fan speeds are for continuous operations, the Design for fast sizing PSU of rooms.
- Sound power level according to ISO-3745 standard, sound pressure level for a distance of 2m in a room of a total volume of 100 m^3 and reverb time of 0.5 s assuming room dampening of 8 dB(A).

CORRECTIVE COEFFICIENTS FOR 90 mm HIGH VKN1 HEATERS

Corrective coefficients for selection of heating power of 90mm high Verano type VKN1 heaters, for parameters different than 75/65/20°C.

Heating fluid temperature [°C]		Room temperature θ_i [°C]						
t_z	t_p	5	8	12	16	20	25	32
90	85	1,647	1,587	1,508	1,428	1,349	1,269	1,110
	80	1,597	1,538	1,458	1,378	1,299	1,219	1,060
	75	1,547	1,488	1,408	1,329	1,249	1,169	1,010
	70	1,498	1,438	1,358	1,279	1,199	1,120	0,960
85	80	1,547	1,488	1,408	1,329	1,249	1,169	1,010
	75	1,498	1,438	1,358	1,279	1,199	1,120	0,960
	70	1,448	1,388	1,309	1,229	1,149	1,070	0,910
	65	1,398	1,339	1,259	1,179	1,100	1,020	0,860
80	75	1,448	1,388	1,309	1,229	1,149	1,070	0,910
	70	1,398	1,339	1,259	1,179	1,100	1,020	0,860
	65	1,349	1,289	1,209	1,129	1,050	0,970	0,811
	60	1,299	1,239	1,159	1,080	1,000	0,920	0,761
75	70	1,349	1,289	1,209	1,129	1,050	0,970	0,811
	65	1,299	1,239	1,159	1,080	**1,000**	0,920	0,761
	60	1,249	1,189	1,110	1,030	0,950	0,870	0,711
	55	1,199	1,139	1,060	0,980	0,900	0,821	0,661
70	65	1,249	1,189	1,110	1,030	0,950	0,870	0,711
	60	1,199	1,139	1,060	0,980	0,900	0,821	0,661
	55	1,149	1,090	1,010	0,930	0,851	0,771	0,611
	50	1,100	1,040	0,960	0,880	0,801	0,721	0,561
65	60	1,149	1,090	1,010	0,930	0,851	0,771	0,611
	55	1,100	1,040	0,960	0,880	0,801	0,721	0,561
	50	1,050	0,990	0,910	0,831	0,751	0,671	0,511
	45	1,000	0,940	0,860	0,781	0,701	0,621	0,461
60	55	1,050	0,990	0,910	0,831	0,751	0,671	0,511
	50	1,000	0,940	0,860	0,781	0,701	0,621	0,461
	45	0,950	0,890	0,811	0,731	0,651	0,571	0,411
	40	0,900	0,841	0,761	0,681	0,601	0,521	0,361
55	50	0,950	0,890	0,811	0,731	0,651	0,571	0,411
	45	0,900	0,841	0,761	0,681	0,601	0,521	0,361
	40	0,851	0,791	0,711	0,631	0,551	0,471	0,311
	35	0,801	0,741	0,661	0,581	0,501	0,421	0,261
50	45	0,851	0,791	0,711	0,631	0,551	0,471	0,311
	40	0,801	0,741	0,661	0,581	0,501	0,421	0,261
	35	0,751	0,691	0,611	0,531	0,451	0,371	0,211
45	40	0,751	0,691	0,611	0,531	0,451	0,371	0,211
	35	0,701	0,641	0,561	0,481	0,401	0,321	0,161
40	35	0,651	0,591	0,511	0,431	0,351	0,271	0,111
	30	0,601	0,541	0,461	0,381	0,301	0,221	0,061
35	30	0,551	0,491	0,411	0,331	0,251	0,171	0,010

Corrective coefficients for selection of heating power that include the type of grille.

TYPE OF GRATING	AIRFLOW	CORRECTIVE COEFFICIENT
Roll-up aluminium, double t-bar	67%	1,00
Roll-up aluminium, closed profile	61%	0,98
Roll-up wooden grille	52%	0,97
Modular grille	63%	0,99
Linear grille	58%	0,98
Stainless steel grille	62%	0,99

WATER CAPACITIES FOR VKN1 HEATERS

Heater length Lk [inch]	Heater type	
	VKN1-6,5/14/Lk VKN1-9/14/Lk	VKN1-6,5/17/Lk VKN1-9/17/Lk
	Water capacity [usGPM]	
37-1-2	0.05	0.07
43-1/3	0.06	0.09
49-1/4	0.07	0.11
57-1/8	0.08	0.13
65	0.10	0.15
70-3/4	0.11	0.16
78-3/4	0.12	0.18

DECLARED USER CHARACTERISTICS

- Maximum permissible operating pressure: 300 PSI.
- Test pressure 360 PSI.
- Maximum hydraulic pressure: 300 PSI.
- Maximum operating temperature: 230°F

PRESSURE DROP

VKN1-6,5/14/Lk
VKN1-9/14/Lk

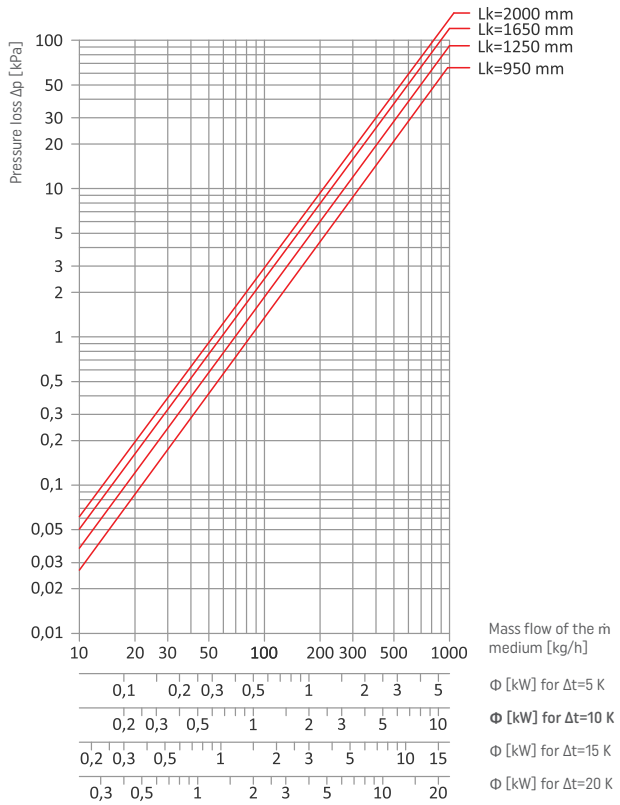

VKN1-6,5/17/Lk
VKN1-9/17/Lk

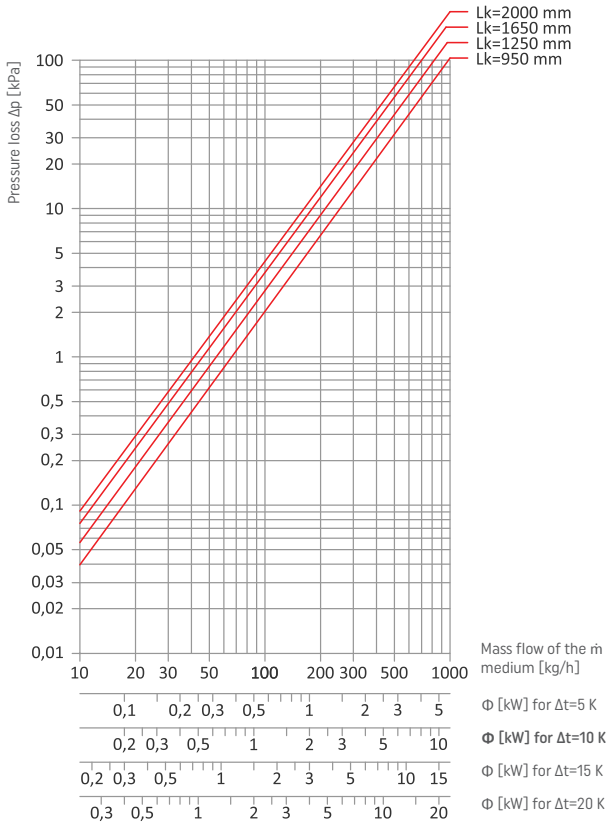

CONTROLING THE VKN5 HEATER

Selecting power supply:

1. Using the table included in the catalogue read themaximum power of electric fan of selected heater. Selection of power lower than the maximal will result in switching off fans in higher fan speed and may result in damage to power supply unit or fan motor.

   Maximum energy demand and current are to be read from the table for the Boost mode.

2. Using the technical sheet of the selected actuator read its maximum electric power – e.g. 4.8 W / 0.2 A for the VERSST24 actuator.

3. Using the technical sheet of the selected controller read its maximum electric power – e.g. 1.3 W / 0.06A for VER-24 and VER-24S controllers.

4. Add up all maximum powers and loads for all devices used (including multiple use of devices).

5. After calculations select the smallest power supply unit that provides the required electric power.

Example:

3 heaters were selected for a room according to its heating power demand:
- 1 x VKN1-6,5/17/125,
- 2 x VKN1-6,5/17/165.

Additionally there are 3 VERSST24 thermal actuators and 1 VER-24 controller in the system.

Using the electric data for VKN1 heaters included on page 9 and the technical sheets of control devices we read:

Devices type	Maximum electric power	Maximum current
1 x VKN1-6,5/17/125 fan heater	1 x 9,2 W	1 x 0,38 A
2 x VKN1-6,5/17/165 fan heater	2 x 12 W	2 x 0,5 A
VERSST24 thermal actuator	3 x 4,8 W	3 x 0,2 A
VER-24 controller	1 x 1,3 W	1 x 0,06 A
Total:	**48,9 W**	**2,04 A**

Power supply unit selected: **Z060W 24VDC (60 W / 2,5 A)**

PRESSURE LOSSES

Based on heater selection mode, as presented on page 40 we selected the **VKN1-6,5/17/165** heater with a power of 682 W at fan voltage of 3.9V. The temperature the cooling medium is cooled by is Δt=10°C

1. Using the axis for 10°C cooled medium we draw a vertical line to the heating power of 0.68 kW till it crosses the transverse line representing heater length of Lk=1650 mm.
2. Draw a horizontal line and read the pressure loss value of **Δp=1.55 kPa**.

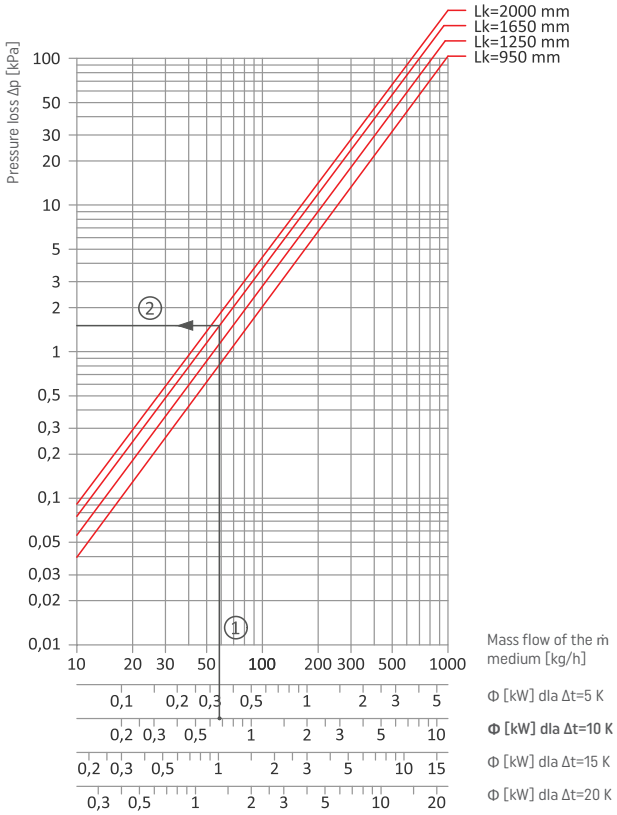

FRAMES FOR TRENCH HEATERS AND CLIMACONVECTORS

- natural aluminum,
- anodized aluminum,
- painted aluminum,
- aluminum – wood imitation

L-type frame

F-type frame

FRAMING DETAILS (inch)

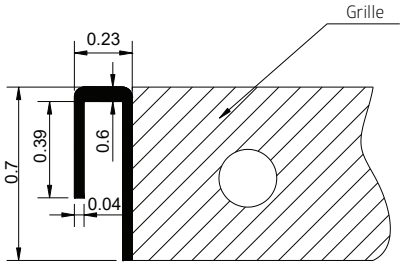

L-type frame

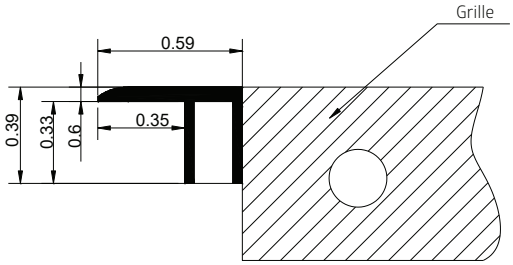

F-type frame

FRAME INSTALLATION

The L and F type aluminum frames are masking elements for the space between the floor and the tray of trench heater. The frames are supplied in form of ready-cut elements for assembly. The assembly should be made with use of silicone adhesive. The manufacturer bears no responsibility for problems with deformations that occurred during wrongful assembly of the heater.

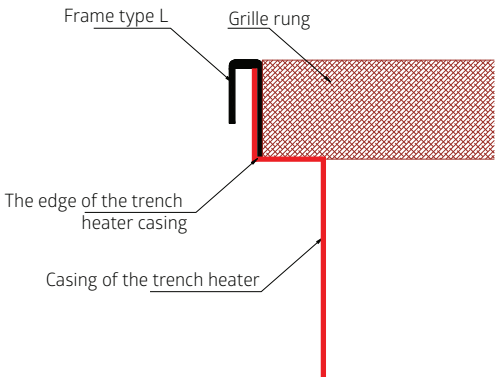

L-type frame

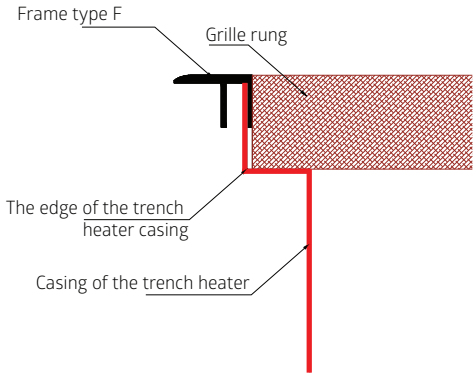

F-type frame

VERANO
BY MDL SOLUTIONS
COMPACT LOWER VOLTAGE FAN COILS AND HYDRONIC HEAT | MDLSOLN.COM

Room temperature controller VER-24

TOUCHSCREEN

2MM FRONT PANEL GLASS

FLUSH MOUNTING

Room temperature controller VER-24

- For fan forced convection type
- For heating/cooling 2-pipes and 4-pipes units

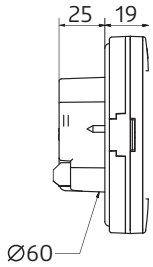

- Output 0 ... 10V DC for fan switched electronically (ECM) 24V
- Control output 0 ... 10V or ON / OFF (24V valve)
- Heating or cooling mode
- Mode: comfortable, economical and protection
- Mode selection: Manual or weekly program
- Color touch display
- Built-in room sensor

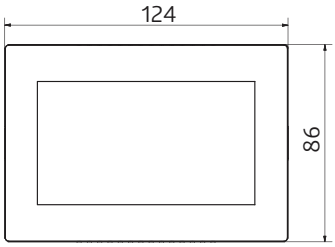

VER-24 Room controller controls the fan and valves in order to keep the room temperature set point. Depending on the selected mode leads to increase the room temperature (heating mode) or to its reduction (cooling mode). The controller smoothly controls the fan speed (depending on the demand gradually increasing or decreasing the speed) and valve operation (depending on the demand gradually increasing or decreasing the degree of opening). In addition, the controller can regulate the work of the second valve – opening or closing it depending on demand.

VER-24 Room controller is designed for a flush mounting.

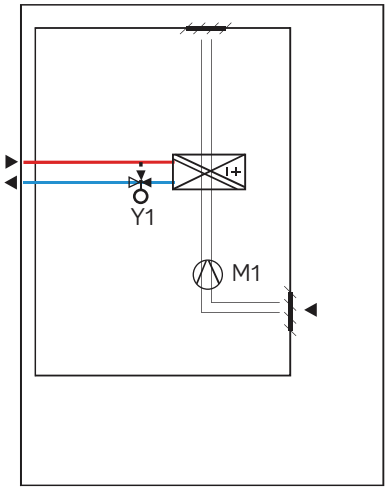

Control devices for VERANO Trench Heaters with Natural Convection type VK15

Name	Description	
Straight thermostatic valve type Siemens VDN 215	Valve diameter 15 DN	
Angular thermostatic valve type Siemens VEN 215	Valve diameter 15 DN	
Straight return valve type Siemens ADN 15	Valve diameter 15 DN	
Angular return valve type Siemens AEN 15	Valve diameter 15 DN	
Straight thermostatic valve type Schlösser 601200004	Valve diameter 15 DN	
Angular thermostatic valve type Schlösser 601200005	Valve diameter 15 DN	
Straight return valve type Schlösser 601300004	Valve diameter 15 DN	
Angular return valve type Schlösser 601300002	Valve diameter 15 DN	
Thermostatic valve with remote control setpoint type Siemens RTN 81	Remote setting element with 2m long capilar	
Thermal servo-motor type Siemens STA 23 or STA 23/00	Supply voltage 230 V AC, STA23 with 1 m connection cable, 2-position control, STA23/00 need a separate cable ASY23L...	
Cabel – type Siemens ASY23L...	Connecting cable to STA 23/00 length 2m, 3m, 5m, 2-position control	
Room temperature controller type Siemens RDD 100	Operating modes: Comfort, Economy, Protection. 2-position control ON/OFF for he- ating. Power Supply 230 V AC (RDD100) or battery 3 V DC (RDD100.1)	
Room temperature controller type Siemens RDE 100	Operating modes: Normal mode and Energy sa- ving. 2-position control with ON/OFF for heating. Weekly program and manual control; Power Supply 230 V AC (RDE10) or battery 3 V DC (RDE10.1)	
Room thermostat type Siemens RAA21	Digital input thermostat (on/off) with changeover contact for automatic room temperature control and other applications in heating and air conditioning systems; Designed for use in small and medium-sized installations.	

Control devices for trench VK 15, wall-mounted and floor-mounted - wireless system

	Name	Description		Net price
NEW	Room temperature controller RF10B	Wireless digital temperature controller 4in1, white, flush-mounted, 120 V		
NEW	Room temperature controller RF10C	Wireless digital temperature controller 4in1, black, flush-mounted, 120 V		
NEW	Room temperature controller RF20B	Wireless digital temperature controller 4in1, white, wall-mounted, 120 V		
NEW	Room temperature controller RF20C	Wireless digital temperature controller 4in1, black, wall-mounted, 120 V		
NEW	Central strip L08	Wireless central strip to control 8 heating zones		
NEW	L04 module	Expansion Module for wireless central strip L08, 4 zones		
NEW	Thermostatic head GM10	Wireless thermostatic head M30x1,5, MINI version		
NEW	Network Repeater RE 10	ZigBee Repeater Network		
NEW	Network Coordinator C010	ZigBee Network Coordinator		
NEW	B30 Internet Gateway	Internet Gateway		

Thermostatic heads for VERANO Floor-mounted and LST Wall-mounted Convectors

	Name	Description		Net price
	Thermostatic head SH Diamant White Cat. No. 600100001	Schlösser thermostatic heads with connection thread M30x1.5 cooperate with all Schlösser valves as well as with other valves with inserts M30x1.5 and closing dimension 11,5 mm		
	Thermostatic head SH Diamant Plus White-Chrome Cat. No. 600100011			
	Thermostatic head SH Brillant White–Chrome Cat. No. 600200001			
	Thermostatic head SH Brillant White Cat. No. 600200002			
	Thermostatic head SH Brillant Chrome Cat. No. 600200003			
	Thermostatic head SH Brillant Satin Cat. No. 600200004			
	Thermostatic head SH Brillant Steel Cat. No. 600200005			
	Thermostatic head SH Brillant Gold Cat. No. 600200007			
NEW	Programmable TRV GP60	Fully programmable thermostatic head		

Control devices for VERANO Trench Heaters Fan Assisted type TURBO VKN and Climaconvectors type CVK2/CVKS and CVK4

Name	Description		Net price
Straight thermostatic valve type Siemens VDN 215	Valve diameter 15 DN		
Angular thermostatic valve type Siemens VEN 215	Valve diameter 15 DN		
Straight return valve type Siemens ADN15	Valve diameter 15 DN		
Angular return valve type Siemens AEN15	Valve diameter 15 DN		
Straight thermostatic valve type Schlösser 601200004	Valve diameter 15 DN		
Angular thermostatic valve type Schlösser 601200005	Valve diameter 15 DN		
Straight return valve type Schlösser 601300004	Valve diameter 15 DN		
Angular return valve type Schlösser 601300002	Valve diameter 15 DN		
Thermal servo-motor type Siemens STA 73 or STA 73/00	Supply voltage 24 V AC/DC, 2-position control. STA73 with 1 m connection cable, STA73/00 – need a separate cable ASY23L...		
Cable – type Siemens ASY23L...	Connection cable for STA 73/00 control mode 0...10 V, length of 2 m, 3 m and 5 m, 2-position control		
NEW Verano controller type VER-24B (White)	The control mode 0 ... 10V or ON / OFF (valve 24V). Ability to work in heating or cooling mode. Operating modes: comfort, economical and security.		
NEW Verano controller type VER-24C (Black)	The control mode 0 ... 10V or ON / OFF (valve 24V). Ability to work in heating or cooling mode. Operating modes: comfort, economical and security.		
Room temperature controller type Siemens RDG160T	Power supply 24 V AC control output 0...10 V DC, for fan with ECM (electronically commutated motor). Automatic or manual heating /cooling. Fan speed is activated		
Rail Power Supply Z030-24VDC	Input voltage 100-240V AC, Input frequency 50-60Hz, Output voltage 24V DC, Max output current 1,25A		
Rail Power Supply Z060-24VDC	Input voltage 100-240V AC, Input frequency 50-60Hz, Output voltage 24V DC, Max output current 2,5A		
Rail Power Supply Z100-24VDC	Input voltage 100-240V AC, Input frequency 50-60Hz, Output voltage 24V DC, Max output current 3,8A		
Rail Power Supply Z120-24VDC	Input voltage 100-240V AC, Input frequency 50-60Hz, Output voltage 24V DC, Max output current 5A		
Rail Power Supply Z240-24VDC	Input voltage 100-240V AC, Input frequency 50-60Hz, Output voltage 24V DC, Max output current 10A		
Rail Power Supply Z480-24VDC	Input voltage 100-240V AC, Input frequency 50-60Hz, Output voltage 24V DC, Max output current 20A		

INSTALLING AND USING VKN FAN HEATERS

Prior to start of assembly always make sure to prepare a trench in the floor with dimensions exceeding the dimensions of the heater by some 1/2" in every direction. Plan the depth of the trench in such a way, that the surface of grille matches the expected floor finish level.

Levelling the trays of fan assisted trench heaters is achieved with use of levelling legs. The legs shall rest on the construction layer of the floor. The next step is to assemble the anchoring screws and anchors that fix the heater to the concrete.

Due to the strength requirements we recommend insulation materials with compression strength of no less than 10 PSI, e.g. the EPS70, for insulation of heater tray. Free spaces between insulation and heater tray should be filled with low compression foam. Tray of trench heater should only be installed after the heating set was first removed from it.

Fan assisted trench heater is installed in such a way that the heat exchanger faces the division and the fan faces the heated room. The fan assisted heaters are not universal – always remember to quote the correct connection side when ordering.

For the duration of finishing works it is recommended to cover the tray with assembly cover that protects the elements of the heater from mechanical damage and dust.

Prior to pouring concrete that the edge of the tray will rest on make sure that all heater water and control connections were installed.

Electric and installation ducts may be connected to the tray from it longer or shorter side. After hydraulic and electric connection of the heater test the correctness of control system and remove all dirt from tray. The poured concrete that the edge of the tray will rest on should be at least 50 mm thick.

During assembly of trench heater always remember about the assembly spreaders that are included with the heater and prevent the tray and heater edge from deformation. Addition of dilatation mat on the side of heater tray allows to lower the contact surface of concrete and heater tray, thus serving as additional acoustic insulation of the heater.

The border L and F type frames are accessories that allow the finishing of the tray borders during finishing works.

All assembly operations should be performed by properly skilled and trained construction industry, electrical and installation workers.

Fan assisted trench heaters could be optionally equipped with adjustable edge. This allows to level the difference between the expected and final height of floor finish without the need to chisel the floor to do that.

The trench heaters used in heating season should not be covered by carpets, furniture or curtains. The grilles can resist pressure and abrasion connected with low intensity pedestrian traffic. Avoid exercising excessive pressure on the grille bars, e.g. by placing room furnishings on them.

Due to the possible influence of dirt on the efficiency of heater we recommend the periodic cleaning of heater tray.

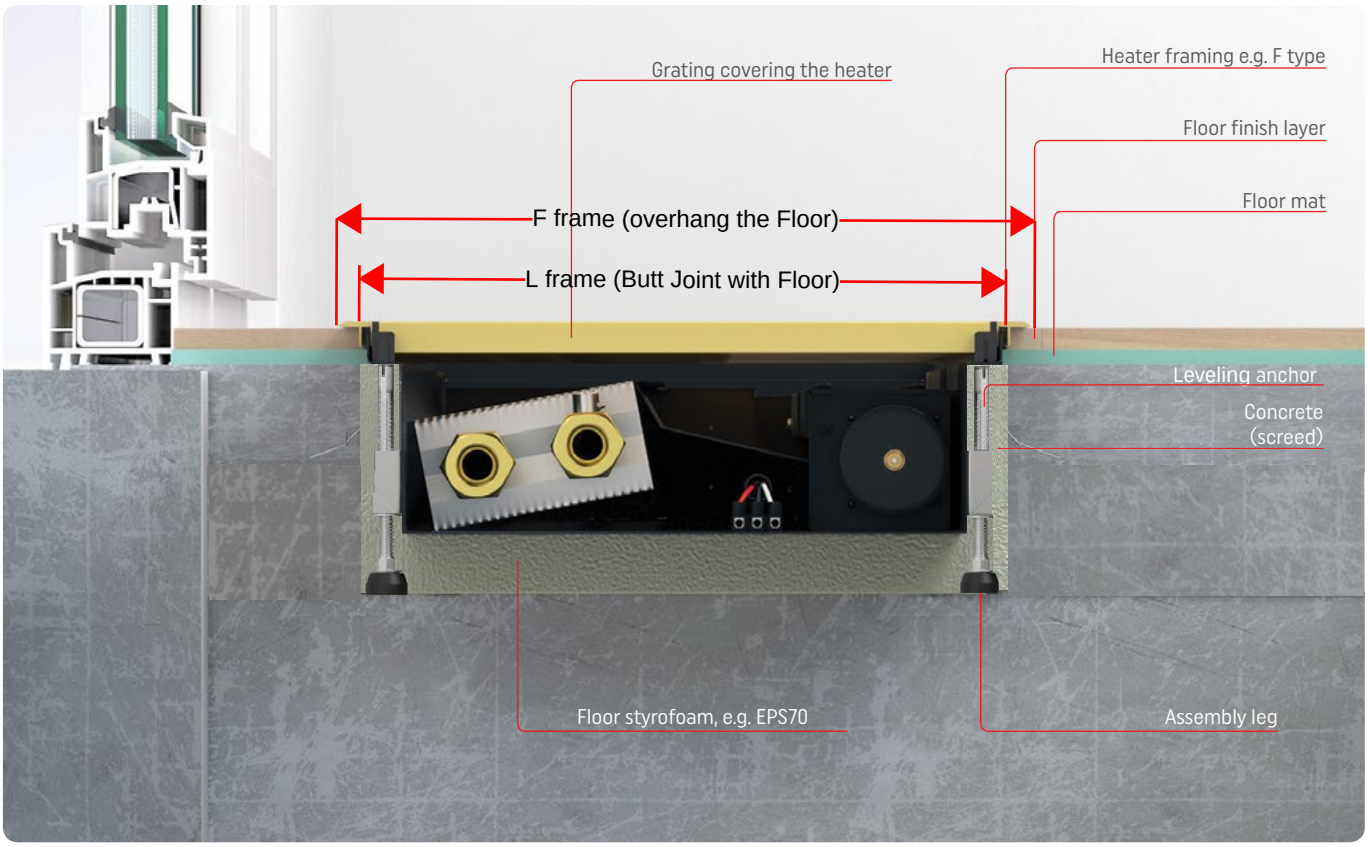

Example of installation of fan assisted trench heater (side view)

VKN HEATER WIRING DIAGRAM

The fan-assisted trench heaters are controlled automatically with use of room thermostat ECM Fan. The thermostat, monitors the room temperature and maintains preset level. The high precision adjustment is the result of the simultaneous control of both the 2-position actuator & ECM fan motor.

The following are required for correct operation of trench heater with fan: Thermostat, OR Temp Controller installed on thermostatic valve and 24V OR BMS System (by other)
DC power supply unit selected according to the electrical characteristics of installed heaters.

The room Thermostat, as per diagram below, is connected with heater fan and the actuator installed on thermostatic valve.
Due to the built-in temperature sensor the room thermostat should not be built over or covered with furniture or other interior design elements.

It is also possible to connect several fan-assisted heaters to a single Power Source.
the heating zones should be correctly designated, so that the number of fan motors does not exceed 12 pieces, that is the upper limit for VER-24 and VER-24 controllers in each of those zones. The detailed electric data are presented in the respective sections of the product catalogue.

The power supply unit should be protected with appropriate overcurrent protection that will also allow to switch the power off during service and maintenance.

WARNING!

Only properly skilled and trained personnel, holding local licenses and observing applicable standards can install electric connections. Power can only be switched back on when the correctness of the whole wiring was checked and approved.

Due to use of safe low-voltage fans the heaters can only be powered by 24 V DC voltage. It is prohibited to connect the heaters directly to 120-230 V AC power grid.

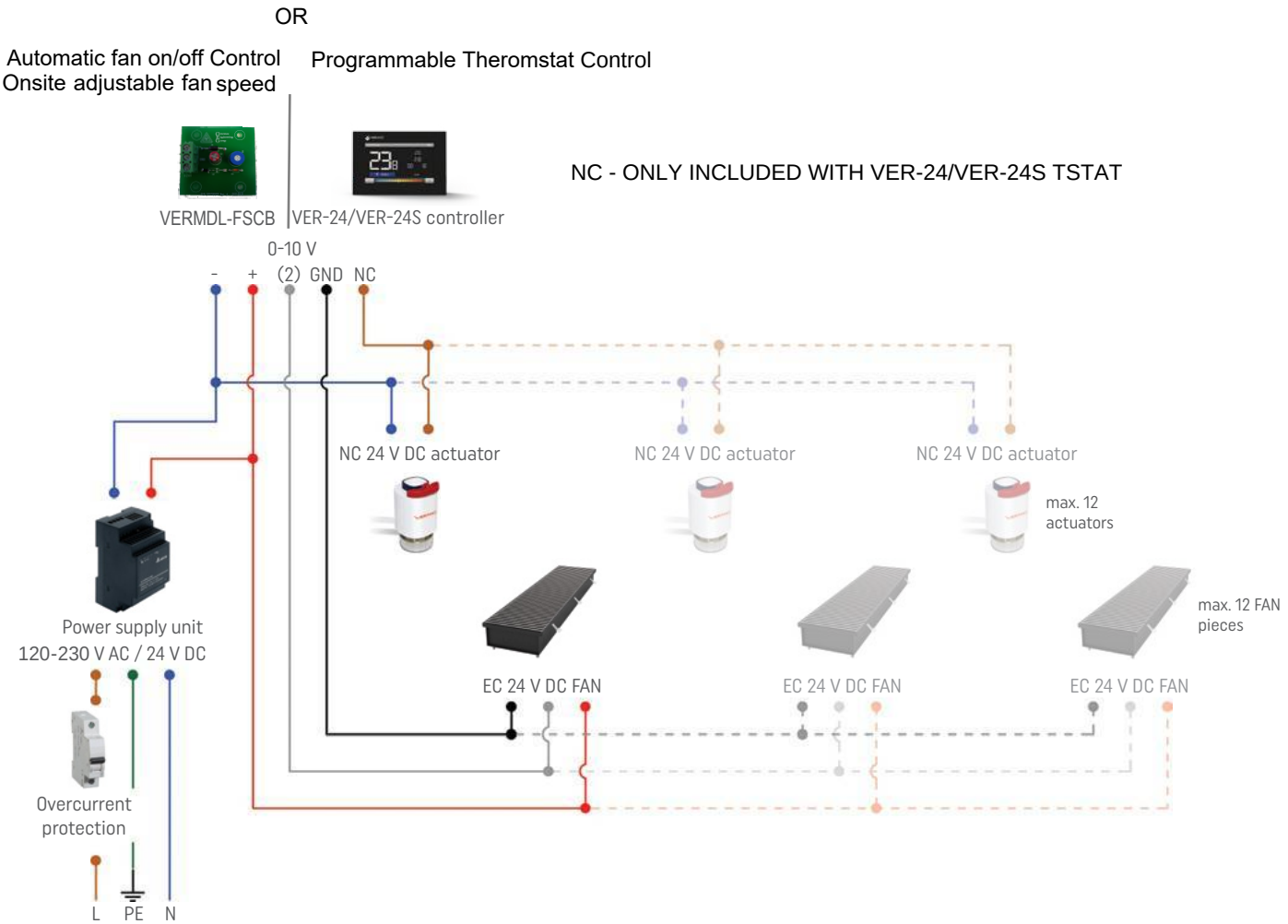

An example wiring diagram for one or several fan-assisted trench heaters with use of a single room temperature controller and the NC type ON/OFF actuators

Inspir Retirement
New York

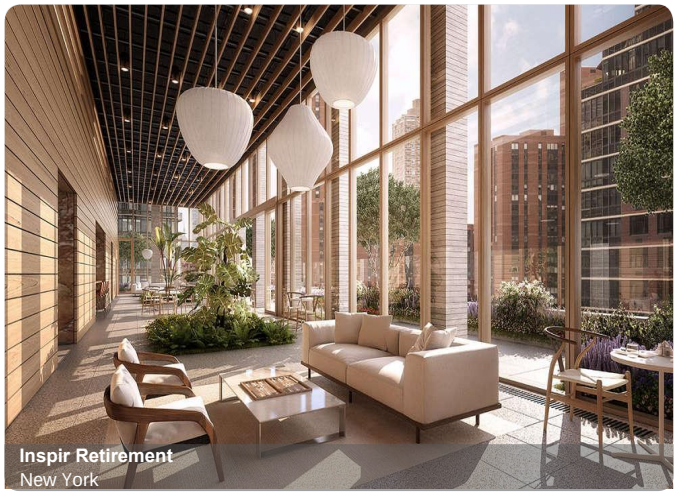

Inspir Retirement
New York

Harbour Plaza
Toronto

Custom House Grenock
Scotland

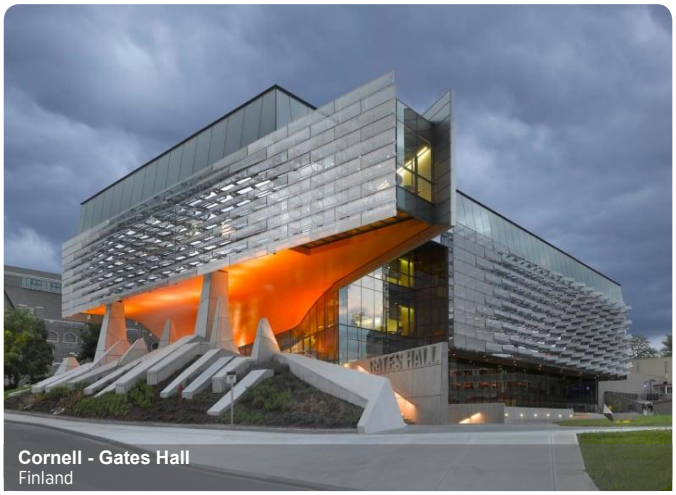

Cornell - Gates Hall
Finland

Fazer exhibition center Vantaa
Finland

Med Kampus Graz, Graz
Austria

Med Kampus Graz, Graz
Austria

MDL SOLUTIONS
2275 UPPER MIDDLE RD E
OAKVILLE ON, L6H 0C3
CANADA

tel. 1 289 799-3414
tel. 1 905 979-5092
general@mdlsoln.com

www.mdlsoln.com

VKN_2018

After completion the edition of the directory on the 2018, may have been some changes in the products listed in. The manufacturer reserves the right to make changes to the design, color and specification. Illustrations may include optional accessories. Printing technology can affect the differences in the forward colors. Please contact to your local sales agent for the newest information of VERANO products.