VHA HORIZONTAL, LOW STATIC, DUCTED FAN COIL UNIT

MDL: PROFESSIONAL GRADE HVAC SOLUTIONS

VERANO®

BY MDL SOLUTIONS

COMPACT LOWER VOLTAGE FAN COILS AND HYDRONIC HEAT | MDLSOLN.COM

INVESTING IN QUALITY, RELIABILITY & PERFORMANCE

ISO 9001 QUALITY

WORLD LEADING DESIGN AND TECHNOLOGY

Equipped with the latest air-conditioning test rooms and manufacturing technology, we produce over 50,000 fan coil units each year, all conforming to the highest international standards of quality and safety.

Every product is manufactured to meet the stringent requirements of the internationally recognized ISO 9001 standard for quality assurance in design, development and production.

ETL SAFETY STANDARDS

THE HIGHEST STANDARDS OF MANUFACTURING

In order to guarantee the very highest standards and performance, we manage every stage in the manufacturing of our products. Throughout the production process we maintain strict control, starting with our extensive resources in research and development through to the design and manufacturing of almost every individual component, from molded plastics to unit and controller assembly.

All products conform to UL standard for Safety for Heating and Cooling Equipment UL1995 4th Edition, October 14, 2011.

All products conform to CSA standard for Safety for Heating and Cooling Equipment CSA C22.2 No.236-11, 4th Edition, October 14 2011.

WEEE MARK

THE HIGHEST STANDARDS OF MANUFACTURING

Our highly trained staff and strict quality control methods enable us to produce products with an exceptional reputation for reliability and efficiency, maintained over many years. As well as full CE certification and ISO 9001, several products ranges have UL /ETL safety approval in the USA and Canada, Eurovent performance and sound certification as well as ROHS compliance for Europe, giving you the confidence of knowing our company is the right choice when selecting fan coil units.

All products conform to the “WEEE” directive to guarantee correct standards of environmental solutions.

MODEL CODE NOMENCLATURE

VHA0-0/1600/3/UY/T

CONTROL TYPE

T - STANDARD CONTROL (SUITABLE FOR THERMOSTAT CONTROL OR 0-10V)

M - COMPLETE CONTROL (MODBUS INTERNAL CONTROL WITH SENSORS)

ELECTRICAL

Y - 115V.1PH.60HZ

X - 220V.1PH.60HZ

CONFIGURATION

COILS

2 PIPE - 3, 4 OR 6 ROWS

4 PIPE - 3+1, 3+2, 4+1, 4+2

UNIT SIZE

UNIT ORIENTATION

0 - STANDARD

MODEL

VHA - HORIZONTAL FAN COIL, LOW STATIC, DUCTED

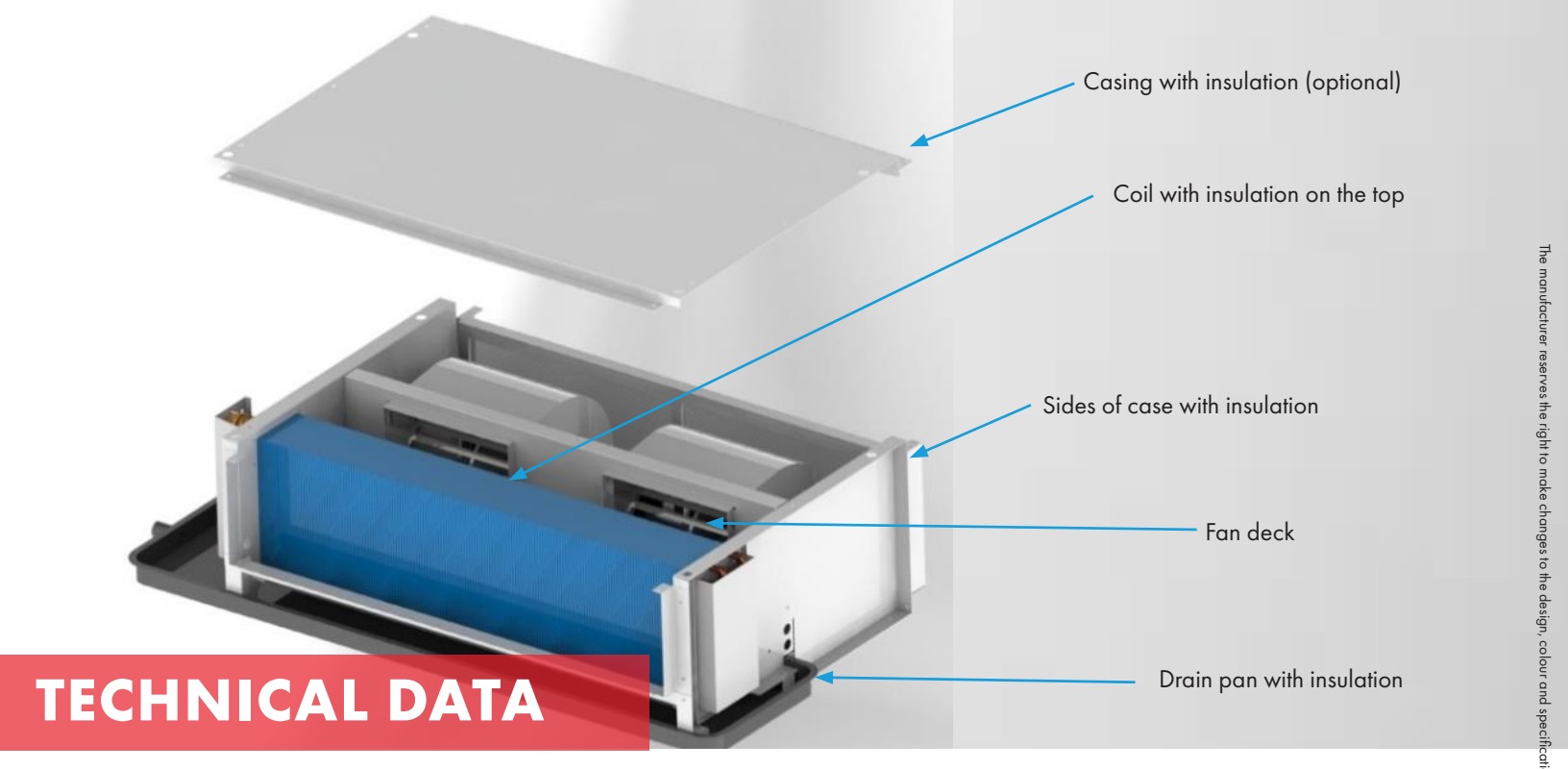

TECHNICAL DATA

GENERAL DESCRIPTION

The low static, ducted fan coil is designed to meet and exceed the demanding requirements for efficiency and quiet operation.

STRUCTURE

The structure is made from heavy-gauge galvanized steel panels with ducting connection couplings and a gravity drain pan with insulation for condensation. Fire resistant insulation is optional for internal case to provide both thermal and acoustic insulation. Insulation is also fitted on the top of coil.

CONDENSATE PANS

Positive sloped drain pans are made from steel, powder finish coated with self-extinguishing closed cell expanded polyethylene with insulating properties. The drain pan is equipped with drain pipe NPT 3/4" (standard on the same side of coil connections).

COILS

Constructed with seamless copper tubes and headers. The tubes are mechanically expanded into corrugated aluminum fin material for a permanent primary to secondary surface bond. Coils are tested at 435 PSI and recommended working pressure is 232 PSI. Coils include manual air vent and water purge valves.

FAN WHEELS

Housing double inlet forward curved centrifugal type. Wheels are statically and dynamically balanced for smooth, quiet operation. The housing is constructed from heavy gauge galvanized steel with die-formed inlet cones.

EC MOTOR

The unit uses an EC motor with driven controls PCB, constant torque, permanent magnet, brushless DC motor with preliminary 3-speed setting that allow for precise air balancing. The driven PCB works with thermostat.

AIR FILTER

Easily removable and washable, made from self-extinguishing acrylic with an efficiency of class Merv 2-4. G4 (Merv 8) or F8 (Merv 14) is optional.

COMPLETE CONTROL

The PCB (printed circuit board) Modbus microprocessor controls functionality of the indoor fan motor, water valves (ON/OFF) and electric heater (optional), to maintain room conditions at a user-defined set point. Temperature settings, fan speeds and other control functions can be changed by either infrared handset or wired wall pad controller.

STANDARD CONTROL

It is suitable for connecting with an external 24 V AC thermostat which sends H/M/L control signal to EC motor. The PCB includes zone control application, simple error diagnostic and electric heater control (optional).

The manufacturer reserves the right to make changes to the design, colour and specifications of the product shown. All images are for illustrative purposes only and some features such as grilles are optional accessories and not considered as standard equipment.

GENERAL PRODUCT SPECIFICATION

VHA - 3 ROW, 2 PIPE, HORIZONTAL DUCTED, LOW STATIC UNITS

VHA - 3 ROW - [SIZE]					200	300	400	500	600	800	1000	1200	1400	1600
UNIT CONFIGURATION		CONFIGURATION			2-PIPE									
		NUMBER OF FAN BLOWERS			SINGLE		TWIN			THREE		FOUR	THREE	FOUR
		POWER SUPPLY (V/PH/HZ)			115/1/60									
					220/1/60									
		OPERATION CONTROL			~M: CompleteControl									
					~T: Standard Control									
PERFORMANCE DATA	AIR	TOTAL AIR FLOW	H	CFM	301	368	532	564	701	948	1093	1254	1541	1950
			M		247	330	448	524	596	777	923	1156	1399	1743
			L		169	242	273	321	487	438	574	862	1221	1516
		EXTERNAL STATIC PRESSURE	H	in.wg	0.2									
			M		0.2									
			L		0.2									
	COOLING	COOLING CAPACITY	H	BTU/Hr	10275	12285	16391	18006	21197	32188	33075	37695	46710	53646
			M		8785	11283	14375	16970	18748	27685	29090	35324	43400	49403
			L		6558	8856	9864	11663	15944	17584	20035	28226	39027	44654
		SENSIBLE COOLING CAPACITY	H		7029	8334	11311	12283	14392	21887	22771	25922	31956	36452
			M		5963	7626	9850	11540	12575	18672	19825	24222	29579	33375
			L		4370	5882	6610	7766	10630	11532	13395	19028	26315	29887
	HEATING	HEATING CAPACITY	H	BTU/Hr	15973	19097	25480	27991	32951	50038	51417	58598	72613	83394
			M		13657	17539	22346	26381	29144	43037	45222	54913	67467	76800
			L		10195	13768	15329	18131	24785	27336	31146	43878	60669	69417
		MAX. ELECTRIC HEATER CAPACITY @ 115V		kW	1	1.5	2	2.5	2.5	3				
		MAX. ELECTRIC HEATER CAPACITY @ 220V		kW	2	3	4	5		6				
	SOUND	SOUND PRESSURE LEVEL (OUTLET)		dB(A)	48/47/43	50/49/46	52/50/44	52/51/46	54/52/49	53/52/47	56/54/50	58/55/52	58/54/50	59/57/55
		SOUND PRESSURE LEVEL (INLET + RADIATED)			50/49/45	52/51/48	54/52/46	54/53/48	46/54/51	55/54/49	58/56/52	60/57/54	60/56/52	61/59/57
		SOUND POWER LEVEL (OUTLET)			57/56/52	59/58/55	61/59/53	61/60/55	63/61/58	62/61/56	65/63/59	67/64/61	67/63/59	68/66/64
		SOUND POWER LEVEL (INLET + RADIATED)			59/58/54	61/60/57	63/61/55	63/62/57	65/63/60	64/63/58	67/65/61	69/66/63	69/65/61	70/68/66
	ELECTRICAL	FAN MOTOR POWER	H	W	53	63	83	96	102	150	180	224	363	380
			M		43	52	58	68	84	128	147	190	286	310
			L		26	31	35	49	62	84	94	113	170	190
		FAN MOTOR RUNNING CURRENT @ 115V	H	A	0.92	1.1	1.44	1.67	1.77	2.61	3.13	3.90	6.31	6.61
		FAN MOTOR RUNNING CURRENT @ 220V	H		0.48	0.57	0.75	0.87	0.93	1.36	1.64	2.04	3.30	3.45
	HYDRAULIC	COOLING WATER FLOW RATE	H	GPM	2.03	2043	3.24	3.56	4.19	6.36	5.53	7.44	9.22	10.6
			M		1.73	3.23	2.84	3.35	3.7	5.47	5.74	6.98	8.57	9.76
			L		1.3	1.75	1.95	2.3	3.15	3.47	3.96	5.57	7.71	8.82
		COOLING PRESSURE DROP	H	ft.wg	7.4	11.2	6.8	8.8	12.7	15.8	5.8	7.7	13.2	18.2
			M		5.6	9.7	5.4	7.9	10.3	12.2	4.7	6.9	11.7	15.8
			L		3.4	6.4	2.9	4.2	7.8	5.6	2.5	4.7	9.8	13.3
		HEATING WATER FLOW RATE		GPM	SAME AS COOLING MODE									
		HEATING PRESSURE DROP	H	ft.wg	6.6	10.1	6.1	7.9	11.4	14.2	5.2	6.9	11.9	16.4
			M		5.1	8.8	4.9	7.1	9.3	11	4.2	6.2	10.5	14.2
			L		3.1	5.8	2.6	3.8	7.0	5.1	2.2	4.2	8.8	12
		WATER CONTENT		GAL	0.19	0.19	0.23	0.27	0.31	0.35	0.51	0.55	0.59	0.75
CONSTRUCTION AND PACKING DATA		WATER CONNECTIONS	TYPE		SOCKET (NPT THREADED)									
			IN	INCH	NPT3/4									
			OUT											
		CONDENSATE DRAINAGE			3/4									
		DIMENSIONS	L	INCH	29 3/4	33 11/16	37 5/8	45 1/2	49 7/16	65 3/16	69 1/16	73	69 1/16	77
			W		21 5/8								24 7/16	
			H		9 13/16								11 13/16	
		NET WEIGHT		LBS	37	51	53	62	68	79	95	99	112	132

NOTES

1. Rated in accordance with AHRI standard 440.
2. Cooling conditions (2-pipe or 4-pipe)
   - Return air temperature: DB 80°F/WB 67°F.
   - Inlet/outlet water temperature: 45/55°F.
3. Heating conditions (2-pipe)
   - Return air temperature: 70°F.
   - Inlet water temperature: 140°F.
   - Water flow-rate: Same as cooling mode

All dimensions are approximate and within 1/16 of an inch of those indicated.

The manufacturer reserves the right to make changes to the design, colour and specifications of the product shown. All images are for illustrative purposes only and some features such as grilles are optional accessories and not considered as standard equipment.

VHA - 4 ROW, 2 PIPE, HORIZONTAL DUCTED, LOW STATIC UNITS

VHA - 4 ROW - [SIZE]					200	300	400	500	600	800	1000	1200	1400	1600
UNIT CONFIGURATION	CONFIGURATION				2-PIPE									
	NUMBER OF FAN BLOWERS				SINGLE		TWIN			THREE		FOUR	THREE	FOUR
	POWER SUPPLY (V/PH/HZ)				115/1/60									
					220/1/60									
	OPERATION CONTROL				~M: Complete Control									
					~T: Standard Control									
PERFORMANCE DATA	AIR	TOTAL AIR FLOW	H	CFM	326	406	543	563	690	972	1040	1103	1676	1865
			M		264	346	469	498	634	819	949	999	1513	1760
			L		176	239	289	298	398	529	476	722	1136	1473
		EXTERNAL STATIC PRESSURE	H	in.wg	0.2									
			M		0.2									
			L		0.2									
	COOLING	COOLING CAPACITY	H	BTU/Hr	9497	14259	18913	21536	24984	38094	39769	42469	59922	62319
			M		8115	12684	16878	19620	23445	33495	36930	39514	55655	59742
			L		5973	9529	11660	13111	16398	24072	21604	30546	44524	52441
		SENSIBLE COOLING CAPACITY	H		6520	9534	12657	18881	16675	25548	26453	28140	40283	41630
			M		5526	8419	11218	17131	15605	22307	24458	25972	37289	39836
			L		3985	6200	7579	11191	10686	15689	13805	19865	29318	34567
	HEATING	HEATING CAPACITY	H	BTU/Hr	14764	22167	29401	33479	38839	59218	61823	66020	93151	96878
			M		12616	19718	26237	30500	36446	52069	57410	61426	86518	92872
			L		9285	14814	18127	20382	25491	37420	33584	47485	69214	81522
		MAX. ELECTRIC HEATER CAPACITY @ 115V		kW	1	1.5	2	2.5	2.5	3				
		MAX. ELECTRIC HEATER CAPACITY @ 220V		kW	2	3	4	5		6				
	SOUND	SOUND PRESSURE LEVEL (OUTLET)		dB(A)	48/47/43	50/49/46	52/50/44	52/51/46	54/52/49	53/52/47	56/54/50	58/55/52	58/54/50	59/57/55
		SOUND PRESSURE LEVEL (INLET + RADIATED)			50/49/45	52/51/48	54/52/46	54/53/48	56/54/51	55/54/49	58/56/52	60/57/54	60/56/52	61/59/57
		SOUND POWER LEVEL (OUTLET)			57/56/52	59/58/55	61/59/53	61/60/55	63/61/58	62/61/56	65/63/59	67/64/61	67/63/59	68/66/64
		SOUND POWER LEVEL (INLET + RADIATED)			59/58/54	61/60/57	63/61/55	63/62/57	65/63/60	64/63/58	67/65/61	69/66/63	69/65/61	70/68/66
	ELECTRICAL	FAN MOTOR POWER	H	W	53	63	83	96	102	150	180	224	363	380
			M		43	52	58	68	84	128	147	190	286	310
			L		26	31	35	49	62	84	94	113	170	190
		FAN MOTOR RUNNING CURRENT @ 115V	H	A	0.92	1.10	1.44	1.67	1.77	2.61	3.13	3.90	6.31	6.61
		FAN MOTOR RUNNING CURRENT @ 220V	H		0.48	0.57	0.75	0.87	0.93	1.36	1.64	2.04	3.30	3.45
	HYDRAULIC	COOLING WATER FLOW RATE	H	GPM	1.88	2.82	3.73	4.25	4.93	7.52	7.85	8.39	11.83	12.31
			M		1.60	2.5	3.33	3.87	4.63	6.61	7.29	7.8	10.99	11.8
			L		1.18	1.88	2.3	2.59	3.24	4.75	4.27	6.03	8.79	10.36
		COOLING PRESSURE DROP	H	ft.wg	9.9	19.4	35.3	16	22.5	28.1	32.6	38.8	27.2	31.4
			M		7.6	15.9	29.1	13.6	20.2	22.6	28.7	34.3	24	29.2
			L		4.5	9.8	15.5	6.9	11.0	12.9	11.5	22.2	16.4	23.4
		HEATING WATER FLOW RATE		GPM	SAME AS COOLING MODE									
		HEATING PRESSURE DROP	H	ft.wg	8.9	17.5	31.8	14.4	20.3	25.3	29.3	34.9	24.5	28.3
			M		6.8	14.3	26.2	12.3	18.2	20.3	25.9	30.9	21.6	26.3
			L		4.0	8.8	14.0	6.2	9.9	11.6	10.4	19.9	14.8	21.1
		WATER CONTENT		GAL	0.19	0.23	0.27	0.31	0.35	0.51	0.55	0.59	0.68	0.75
CONSTRUCTION AND PACKING DATA	WATER CONNECTIONS	TYPE			SOCKET (NPT THREADED)									
		IN		INCH	NPT3/4									
		OUT												
	CONDENSATE DRAINAGE				3/4									
	DIMENSIONS	L		INCH	29 3/4	33 11/16	37 5/8	45 1/2	49 7/16	65 3/16	69 1/16	73	69 1/16	77
		W			21 5/8								24 7/16	
		H			9 13/16								11 13/16	
	NET WEIGHT			LBS	37	51	53	62	68	79	95	99	112	132

NOTES

1. Rated in accordance with AHRI standard 440.
2. Cooling conditions (2-pipe or 4-pipe)
   - Return air temperature: DB 80°F/WB 67°F.
   - Inlet/outlet water temperature: 45/55°F.
3. Heating conditions (2-pipe)
   - Return air temperature: 70°F.
   - Inlet water temperature: 140°F.
   - Water flow-rate: Same as cooling mode

All dimensions are approximate and within 1/16 of an inch of those indicated.

The manufacturer reserves the right to make changes to the design, colour and specifications of the product shown. All images are for illustrative purposes only and some features such as grilles are optional accessories and not considered as standard equipment.

VHA - 3+1 ROW, 4 PIPE, HORIZONTAL DUCTED, LOW STATIC UNITS

VHA - 3+1 ROW - [SIZE]					200	300	400	500	600	800	1000	1200	1400	1600
UNIT CONFIGURATION	CONFIGURATION				4-pipe									
	NUMBER OF FAN BLOWERS				SINGLE		TWIN			THREE		FOUR	THREE	FOUR
	POWER SUPPLY (V/PH/HZ)				115/1/60									
					220/1/60									
	OPERATION CONTROl				~M: Complete Control									
					~T: Standard Control									
PERFORMANCE DATA / AIR	TOTAL AIR FLOW	H	CFM		326	406	543	563	690	972	1040	1103	1676	1865
		M			264	346	469	498	634	819	949	999	1513	1760
		L			176	239	289	298	398	529	476	722	1136	1473
	EXTERNAL STATIC PRESSURE	H	in.wg		0.2									
		M			0.2									
		L			0.2									
COOLING	COOLING CAPACITY	H	BTU/Hr		10880	13151	16670	18006	20876	32809	31669	34007	49689	52103
		M			9247	11700	14895	16323	19592	28757	29559	31609	46048	49789
		L			6781	8856	10222	11064	13715	20563	17247	24649	36936	43436
	SENSIBLE COOLING CAPACITY	H			7468	8961	11521	12283	14150	22333	21761	23242	34083	35358
		M			6291	7921	10222	11050	13181	19459	20183	21436	31484	33665
		L			6780	5882	6861	7334	9070	13637	11394	16549	24809	29015
HEATING	HEATING CAPACITY	H	BTU/Hr		8812	10878	14076	14986	17792	25527	27253	28798	40554	45006
		M			7478	9635	12595	13684	16606	22403	25453	26683	37596	43340
		L			5493	7298	8725	9115	11561	16037	14927	20781	30061	37870
SOUND	SOUND PRESSURE LEVEL (OUTLET)		dB(A)		48/47/43	50/49/46	52/50/44	52/51/46	54/52/49	53/52/47	56/54/50	58/55/52	58/54/50	59/57/55
	SOUND PRESSURE LEVEL (INLET + RADIATED)				50/49/45	52/51/48	54/52/46	54/53/48	56/54/51	55/54/49	58/56/52	60/57/54	60/56/52	61/59/57
	SOUND POWER LEVEL (OUTLET)				57/56/52	59/58/55	61/59/53	61/60/55	63/61/58	62/61/56	65/63/59	67/64/61	67/63/59	68/66/64
	SOUND POWER LEVEL (INLET + RADIATED)				59/58/54	61/60/57	63/61/55	63/62/57	65/63/60	64/63/58	67/65/61	69/66/63	69/65/61	70/68/66
ELECTRICAL	FAN MOTOR POWER	H	W		53	63	83	96	102	150	180	224	363	380
		M			43	52	58	68	84	128	147	190	286	310
		L			26	31	35	49	62	84	94	113	170	190
	FAN MOTOR RUNNING CURRENT @ 115V	H	A		0.92	1.10	1.44	1.67	1.77	2.61	3.13	3.90	6.31	6.61
	FAN MOTOR RUNNING CURRENT @ 220V	H			0.48	0.57	0.75	0.87	0.93	1.36	1.64	2.04	3.30	3.45
HYDRAULIC	COOLING WATER FLOW RATE	H	GPM		2.15	2.6	3.29	3.56	4.12	6.48	6.25	6.72	9.81	10.29
		M			1.83	2.31	2.94	3.22	3.87	5.68	5.84	6.24	9.09	9.83
		L			1.34	1.75	2.02	2.18	2.71	4.06	3.41	4.87	7.29	8.58
	COOLING PRESSURE DROP	H	ft.wg		8.1	12.6	7.0	8.8	12.4	16.3	5.4	6.5	14.7	17.3
		M			6.2	10.4	5.8	7.4	11.1	13.0	4.8	5.7	12.9	16.0
		L			3.6	6.4	3.0	3.8	6.1	7.4	1.9	3.7	8.9	12.7
	HEATING WATER FLOW RATE	H	GPM		0.44	0.54	0.7	0.75	0.89	1.27	1.36	1.43	2.02	2.24
		M			0.37	0.48	0.63	0.68	0.83	1.12	1.27	1.33	1.87	2.16
		L			0.27	0.36	0.43	0.45	0.58	0.8	0.74	1.04	1.5	1.89
	HEATING PRESSURE DROP	H	ft.wg		0.9	1.5	2.6	3.3	0.7	1.8	2.1	2.6	0.4	0.5
		M			0.8	1.2	2.2	2.8	0.6	1.4	1.9	2.2	0.4	0.5
		L			0.4	0.7	1.2	1.4	0.3	0.8	0.8	1.5	0.3	0.4
	COOLING WATER CONTENT		GAL		0.19	0.23	0.27	0.31	0.35	0.51	0.55	0.59	0.68	0.75
	HEATING WATER CONTENT				0.06	0.08	0.09	0.1	0.12	0.17	0.18	0.2	0.23	0.25
CONSTRUCTION AND PACKING DATA	WATER CONNECTIONS	TYPE			SOCKET (NPT THREADED)									
		In	INCH		NPT3/4									
		Out												
	CONDENSATE DRAINAGE				3/4									
	DIMENSIONS	L	INCH		29 3/4	33 11/16	37 5/8	45 1/2	49 7/16	65 3/16	69 1/16	73	69 1/16	77
		W			21 5/8								24 7/16	
		H			9 13/16								11 13/16	
	NET WEIGHT		LBS		37	51	53	62	68	79	95	99	112	132

The manufacturer reserves the right to make changes to the design, colour and specifications of the product shown. All images are for illustrative purposes only and some features such as grilles are optional accessories and not considered as standard equipment.

NOTES

1. Rated in accordance with AHRI standard 440.
2. Cooling conditions (2-pipe or 4-pipe)
   - Return air temperature: DB 80°F/WB 67°F.
   - Inlet/outlet water temperature: 45/55°F.
3. Heating conditions (2-pipe)
   - Return air temperature: 70°F.
   - Inlet/Outlet Water Temperature: 180/140°F.

DIMENSION DRAWINGS VHA 2-PIPE

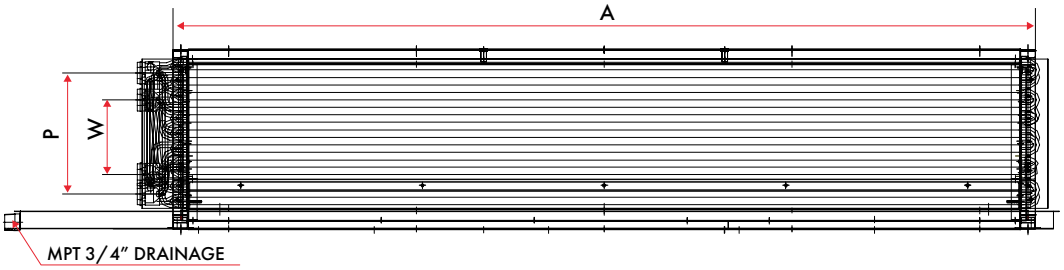

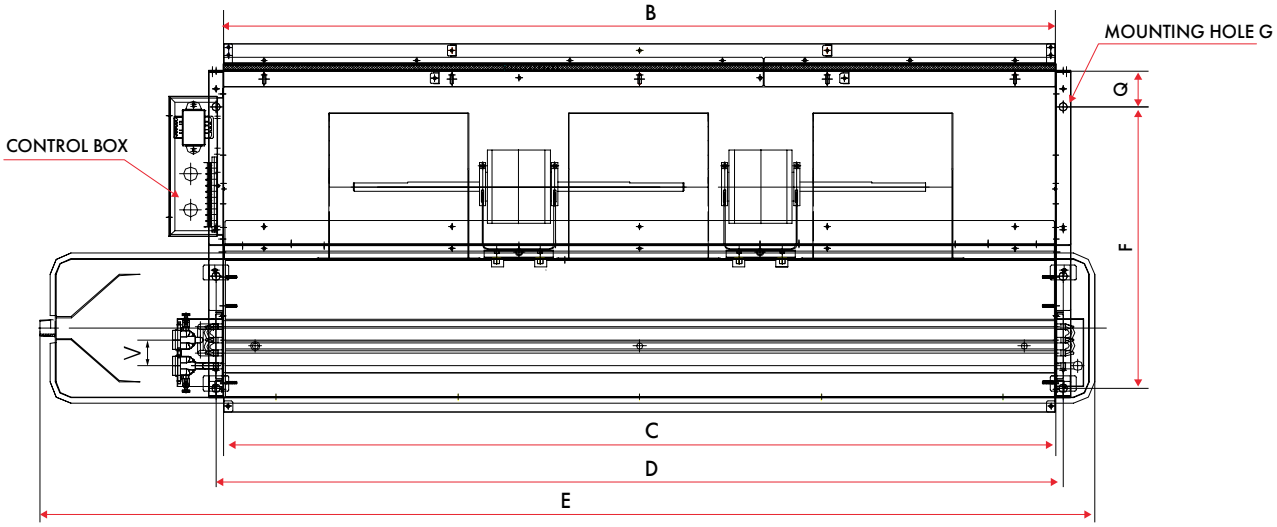

2 PIPE

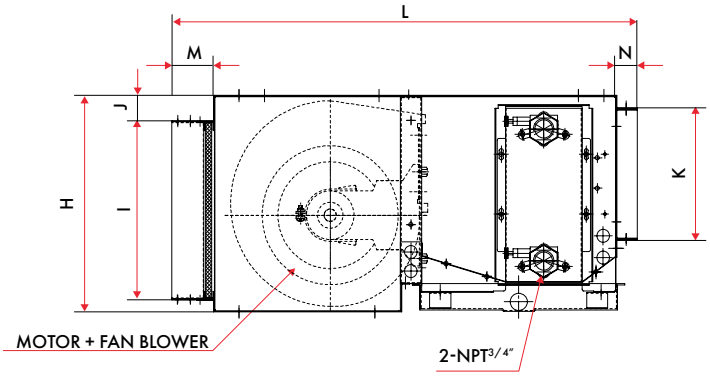

MODEL	A	B	C	D	E	F	G	H	I	J	K	L	M	N	P	Q	V	W
VHA-200	21 1/16	19 1/8	19 1/8	20 1/16	29 3/4	15 3/4	Ø 9/16	9 13/16	8 3/8	1	6	21 1/2	1 3/8	1	6	2 3/8	1 11/16	2 15/16
VHA-300	25	2 3 1/16	2 3 1/16	24	33 11/16	15 3/4	Ø 9/16	9 13/16	8 3/8	1	6	21 1/2	1 3/8	1	6	2 3/8	1 11/16	2 15/16
VHA-400	28 15/16	26 15/16	26 15/16	27 15/16	37 10/16	15 3/4	Ø 9/16	9 13/16	8 3/8	1	6	21 1/2	1 3/8	1	6	2 3/8	1 11/16	2 15/16
VHA-500	32 7/8	30 7/8	30 7/8	31 7/8	45 1/2	15 3/4	Ø 9/16	9 13/16	8 3/8	1	6	21 1/2	1 3/8	1	6	2 3/8	1 11/16	2 15/16
VHA-600	36 13/16	34 13/16	34 13/16	35 13/16	49 7/16	15 3/4	Ø 9/16	9 13/16	8 3/8	1	6	21 1/2	1 3/8	1	6	2 3/8	1 11/16	2 15/16
VHA-800	52 9/16	50 9/16	50 9/16	51 9/16	65 3/16	15 3/4	Ø 9/16	9 13/16	8 3/8	1	6	21 1/2	1 3/8	1	6	2 3/8	1 11/16	2 15/16
VHA-1000	56 1/2	54 1/2	54 1/2	55 1/2	69 1/8	15 3/4	Ø 9/16	9 13/16	8 3/8	1	6	21 1/2	1 3/8	1	6	2 3/8	1 11/16	2 15/16
VHA-1200	62	6 0 1/16	6 0 1/16	61	73 1/16	15 3/4	Ø 9/16	9 13/16	8 3/8	1	6	21 1/2	1 3/8	1	6	2 3/8	1 11/16	2 15/16
VHA-1400	56 1/2	54 1/2	54 1/2	55 8/16	69 1/8	18 1/2	Ø 9/16	11 13/16	10 3/8	1	6	21 1/2	1 3/8	1	71 5/16	2 3/8	1 11/16	4 15/16
VHA-1600	66 3/4	64 3/4	64 3/4	65 3/4	76 15/16	18 1/2	Ø 9/16	11 13/16	10 3/8	1	6	21 1/2	1 3/8	1	71 5/16	2 3/8	1 11/16	4 15/16

All dimensions are approximate and within 1/16 of an inch of those indicated.

The manufacturer reserves the right to make changes to the design, colour and specifications of the product shown. All images are for illustrative purposes only and some features such as grilles are optional accessories and not considered as standard equipment.

DIMENSION DRAWINGS VHA 4-PIPE

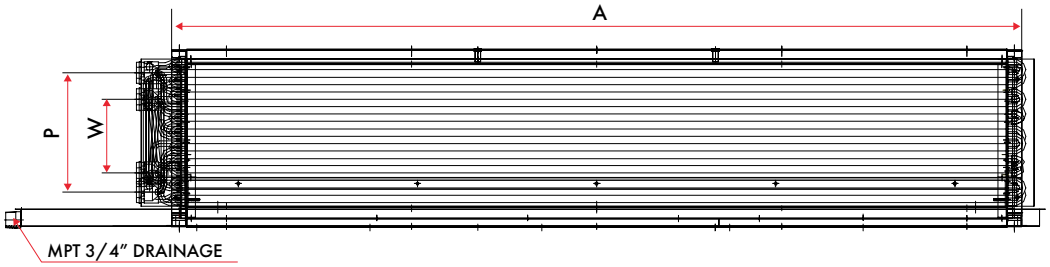

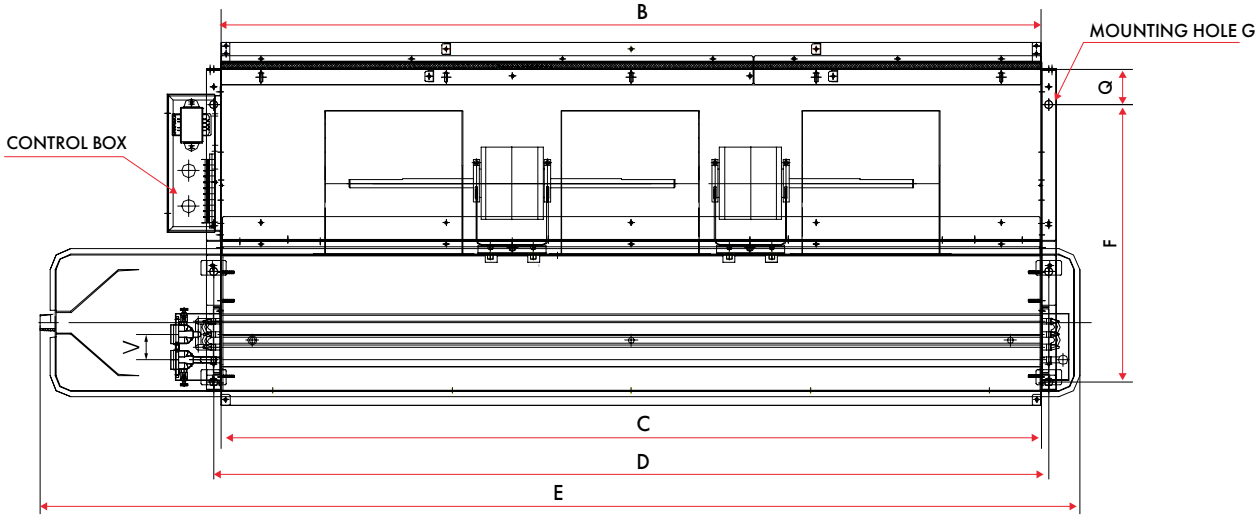

4 PIPE

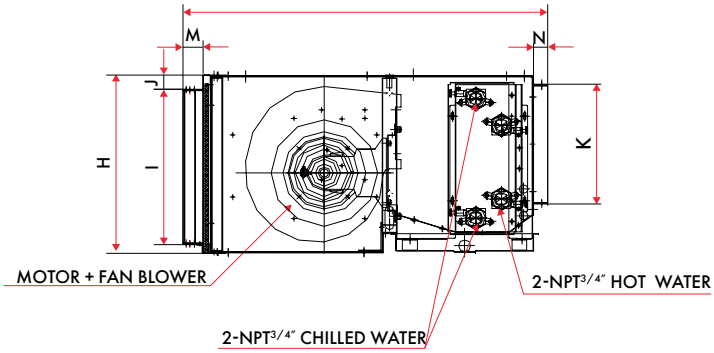

MODEL	A	B	C	D	E	F	G	H	I	J	K	L	M	N	P	Q	V	W
VHA-200	21 1/16	19 1/8	19 1/8	20 1/16	29 3/4	15 3/4	Ø 9/16	9 13/16	8 3/8	1	6	21 1/2	1 3/8	1	6	2 3/8	1 11/16	2 15/16
VHA-300	25	2 3 1/16	2 3 1/16	24	33 11/16	15 3/4	Ø 9/16	9 13/16	8 3/8	1	6	21 1/2	1 3/8	1	6	2 3/8	1 11/16	2 15/16
VHA-400	28 15/16	26 15/16	26 15/16	27 15/16	37 10/16	15 3/4	Ø 9/16	9 13/16	8 3/8	1	6	21 1/2	1 3/8	1	6	2 3/8	1 11/16	2 15/16
VHA-500	32 7/8	30 7/8	30 7/8	31 7/8	45 1/2	15 3/4	Ø 9/16	9 13/16	8 3/8	1	6	21 1/2	1 3/8	1	6	2 3/8	1 11/16	2 15/16
VHA-600	36 13/16	34 13/16	34 13/16	35 13/16	49 7/16	15 3/4	Ø 9/16	9 13/16	8 3/8	1	6	21 1/2	1 3/8	1	6	2 3/8	1 11/16	2 15/16
VHA-800	52 9/16	50 9/16	50 9/16	51 9/16	65 3/16	15 3/4	Ø 9/16	9 13/16	8 3/8	1	6	21 1/2	1 3/8	1	6	2 3/8	1 11/16	2 15/16
VHA-1000	56 1/2	54 1/2	54 1/2	55 1/2	69 1/8	15 3/4	Ø 9/16	9 13/16	8 3/8	1	6	21 1/2	1 3/8	1	6	2 3/8	1 11/16	2 15/16
VHA-1200	62	6 0 1/16	6 0 1/16	61	73 1/16	15 3/4	Ø 9/16	9 13/16	8 3/8	1	6	21 1/2	1 3/8	1	6	2 3/8	1 11/16	2 15/16
VHA-1400	56 1/2	54 1/2	54 1/2	55 8/16	69 1/8	18 1/2	Ø 9/16	11 13/16	10 3/8	1	6	21 1/2	1 3/8	1	71 5/16	2 3/8	1 11/16	4 15/16
VHA-1600	66 3/4	64 3/4	64 3/4	65 3/4	76 15/16	18 1/2	Ø 9/16	11 13/16	10 3/8	1	6	21 1/2	1 3/8	1	71 5/16	2 3/8	1 11/16	4 15/16

All dimensions are approximate and within 1/16 of an inch of those indicated.

The manufacturer reserves the right to make changes to the design, colour and specifications of the product shown. All images are for illustrative purposes only and some features such as grilles are optional accessories and not considered as standard equipment.

CAPACITY CORRECTIONS

% NOMINAL AIR FLOWCFM	TOTAL COOLING	SENSIBLE COOLING	HEATING
40	0.551	0.522	0.499
50	0.646	0.617	0.596
60	0.731	0.704	0.686
70	0.808	0.786	0.771
80	0.878	0.861	0.851
90	0.941	0.933	0.927
100	1.000	1.000	1.000
110	1.054	1.064	1.069
120	1.104	1.125	1.136
130	1.150	1.183	1.199
140	1.194	1.239	1.261
150	1.234	1.292	1.319

NOTES:

1. Above factors are based on the same water flow.

The manufacturer reserves the right to make changes to the design, colour and specifications of the product shown. All images are for illustrative purposes only and some features such as grilles are optional accessories and not considered as standard equipment.

EXPLODED DIAGRAM

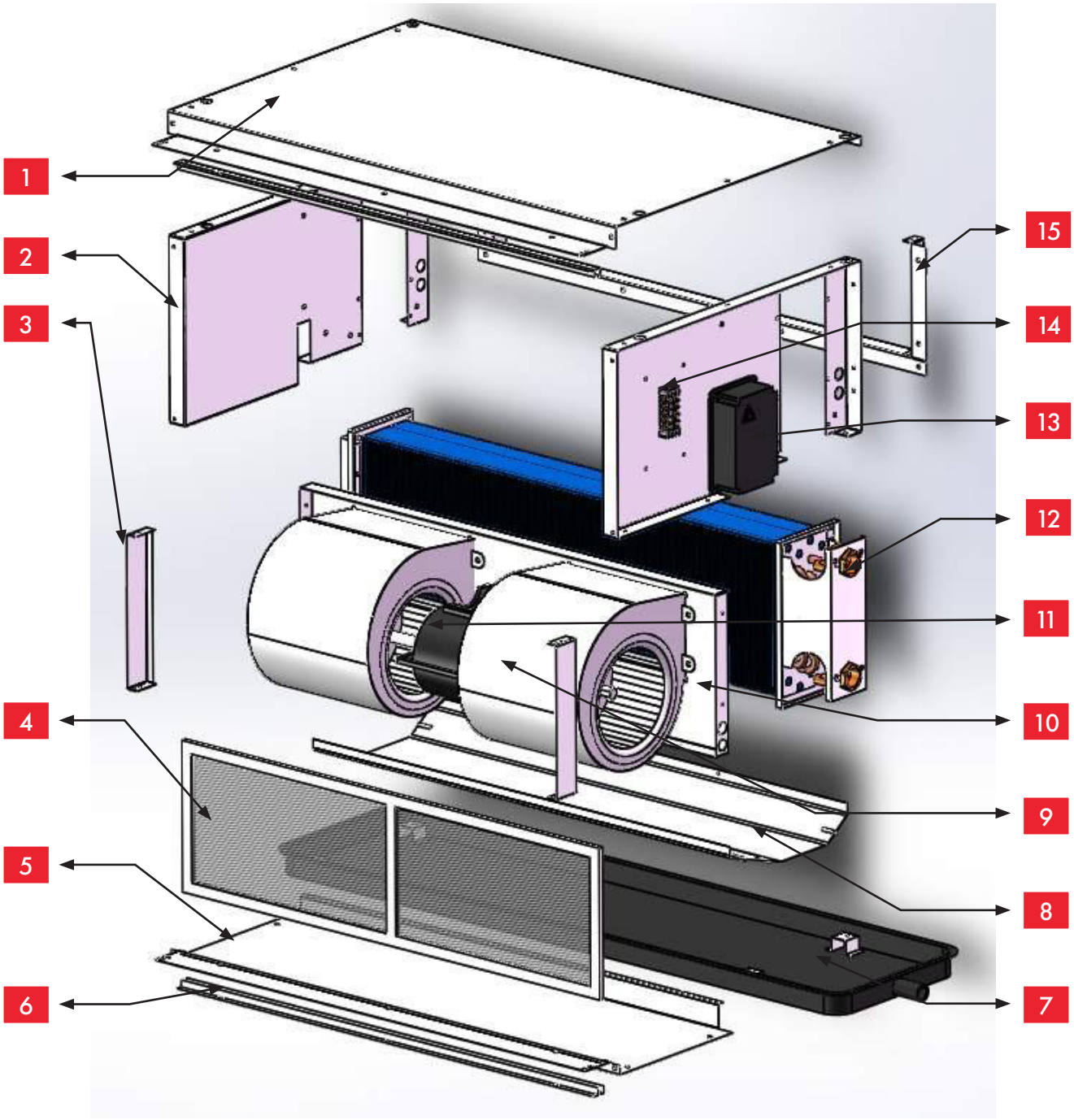

ITEM	DESCRIPTION	ITEM	DESCRIPTION
1	TOP PANEL	9	FAN BLOWER
2	RIGHT SIDE PANEL	10	FAN DECK
3	RETURN AIR FLANGE	11	MOTOR
4	FILTER	12	COIL
5	BOTTOM PANEL	13	CONTROL BOX
6	FILTER FIXTURE	14	TERMINAL BLOCK
7	DRAIN PAN	15	DISCHARGE FLANGE
8	DRAIN GUIDE		

The manufacturer reserves the right to make changes to the design, colour and specifications of the product shown. All images are for illustrative purposes only and some features such as grilles are optional accessories and not considered as standard equipment.

OPTIONAL ACCESSORIES

UNIT ACCESSORIES

- Electrical Heaters
  - The electric heater module is supplied for winter heating as an alternative to the auxiliary hot water coil. We offer a complete range of electric heaters kits, which are easy to connect to the control box with a mounting fixture. The electric heater configuration is selectable by DIP switch on the internal control board.
- Auxiliary heating coils
  - Factory or on-site installation heating coil for 4-pipe application.
- Valves & Actuator
  - 2-way or 3-way valve with motorized 24 V on/off or modulating actuator integrated with SS hose and copper piping connection kits
- Insulation For Sound Attenuation
  - 0.2, 0.4 inches or 0.6 inches NBR material insulation for sound attenuation
- Stainless Steel Drain Pan

CONTROL ACCESSORIES

- Complete Control Board
  - Infra-Red Handset Controller & Wall Holder *(currently not available in North America)*
    - With Global Control functionality for Main and Secondary unit groups.
- Unlimited Wired Wall Pad Controller *(currently not available in North America)*
  - **Features:** 7 day ON/OFF timer program. Addressable Main and Secondary units allowing control of up to 32 secondary units via a single Main Unit with set or check of each unit parameters individually. Error display with addressable error diagnostic (Main unit Wall Pad displays Secondary unit address and error type). One Touch Global Control (Global Control Main Unit Wall Pad controls all units in the group). Complete with Onboard Room Air Temperature Sensor.
- DIP Switch Configuration Service
  - Pre-set DIP switches for master/slave option, 2/4-pipe, Preheat temperature, Operation mode settings.
- ABS External LED Receiver
  - IR receiver in ABS housing with up to 70in length prewiring. LED lights show working mode or error code.
- Standard Control Board
  - Universal EC Thermostat
    - **Main functions:** 2-pipe, 4-pipe, 2-pipe+floor heating mode, floor heating, and cooling. AC/EC motor 3-speed control. Motorized valve control. 0-10 V DC Modulating valve. EC motor RPM control. Low temperature protection. Remote ON/OFF function. Power supply: 24 V AC or V DC. Working environment: 32-122, 5-95%RH (no condensate). Self-power consumption: <2W. Protection class: IP30.
- STCD Series Thermostats

The manufacturer reserves the right to make changes to the design, colour and specifications of the product shown. All images are for illustrative purposes only and some features such as grilles are optional accessories and not considered as standard equipment.

VERANO®

BY MDL SOLUTIONS

COMPACT LOWER VOLTAGE FAN COILS AND HYDRONIC HEAT | MDLSOLN.COM

The data presented in this document is correct at time of publication. Illustrations may include optional accessories. Due to continuous research and development, and the desire to improve the quality of our products, MDL Solutions reserves the right to make changes regarding design and specifications without prior notice.

MDL SOLUTIONS
2275 UPPER MIDDLE RD E #101
OAKVILLE, ON L6H 0C3
CANADA
tel. 1 289 799-3414
www.mdlsoln.com

VHA-CA-05-2022