VHB HORIZONTAL, HIGH STATIC, DUCTED FAN COIL UNIT

MDL: PROFESSIONAL GRADE HVAC SOLUTIONS

VERANO®
BY MDL SOLUTIONS
COMPACT LOWER VOLTAGE FAN COILS AND HYDRONIC HEAT | MDLSOLN.COM

INVESTING IN QUALITY, RELIABILITY & PERFORMANCE

ISO 9001 QUALITY

WORLD LEADING DESIGN AND TECHNOLOGY

Equipped with the latest air-conditioning test rooms and manufacturing technology, we produce over 50,000 fan coil units each year, all conforming to the highest international standards of quality and safety.

Every product is manufactured to meet the stringent requirements of the internationally recognized ISO 9001 standard for quality assurance in design, development and production.

ETL SAFETY STANDARDS

THE HIGHEST STANDARDS OF MANUFACTURING

In order to guarantee the very highest standards and performance, we manage every stage in the manufacturing of our products Throughout the production process we maintain strict control, starting with our extensive resources in research and development through to the design and manufacturing of almost every individual component, from molded plastics to unit and controller assembly.

All products conform to UL standard for Safety for Heating and Cooling Equipment UL1995 4th Edition, October 14, 2011.

All products conform to CSA standard for Safety for Heating and Cooling Equipment CSA C22.2 No.236-11, 4th Edition, October 14 2011.

WEEE MARK

THE HIGHEST STANDARDS OF MANUFACTURING

Our highly trained staff and strict quality control methods enable us to produce products with an exceptional reputation for reliability and efficiency, maintained over many years. As well as full CE certification and ISO 9001, several products ranges have UL /ETL safety approval in the USA and Canada, Eurovent performance and sound certification as well as ROHS compliance for Europe, giving you the confidence of knowing our company is the right choice when selecting fan coil units.

All products conform to the “WEEE” directive to guarantee correct standards of environmental solutions.

MODEL CODE NOMENCLATURE

VHB0-0/1600/3/UX/T

CONTROL TYPE

T - STANDARD CONTROL (SUITABE FOR THERMOSTAT CONTROL OR 0-10V)

M - COMPLETE CONTROL (MODBUS INTERNAL CONTROL WITH SENSORS)

ELECTRICAL

Y - 115V.1PH.60HZ

X - 220V.1PH.60HZ

COILS

2 PIPE - 3, 4 OR 6 ROWS

4 PIPE - 3+1, 3+2, 4+1, 4+2 ROWS

UNIT SIZE

UNIT ORIENTATION

0 - STANDARD

MODEL

VHB - HORIZONTAL, DUCTED, HIGH STATIC

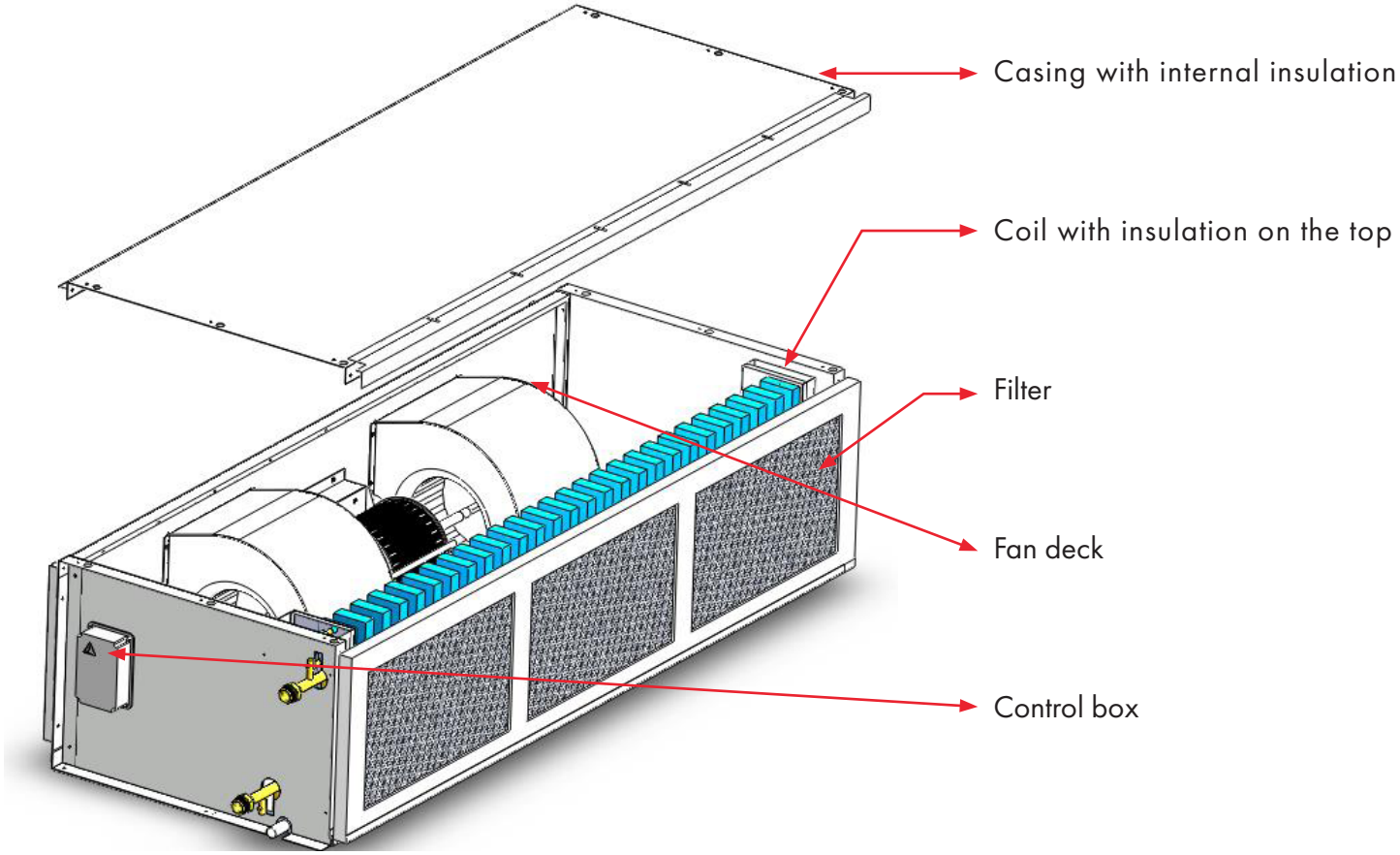

TECHNICAL DATA

GENERAL DESCRIPTION

The Ducted Fan Coil is designed to meet and exceed the demanding requirements for efficiency and quiet operation.

STRUCTURE

The structure is made from electrostatically coated steel panels, complete with ducting connection couplings and gravity drain condensate pan, with insulation. Fire resistant insulation is fitted internally to provide both thermal and acoustic insulation. Insulation is also fitted on the top of coil.

COILS

Constructed with seamless copper tubes and headers. The tubes are mechanically expanded into corrugated aluminum fin material for a permanent primary to secondary surface bond. Coils are tested at 435 PSI and recommended for maximum operating at 232 PSI. Coils include manual air vent and water purge valves.

FAN

The forward-curved centrifugal fan is statically and dynamically balanced for quiet operation.

EC MOTOR

The unit uses an EC motor including driven controls PCB, a constant torque, permanent magnet, brushless EC motor with preliminary 3-speed setting that allows for precise air balancing.

AIR FILTER

The filter is easily removable and washable and is made from self-extinguishing acrylic with a class EU2 (G2) (Merv 2-4) efficiency rating. G4 or F8 (Merv 8 or 14) efficiency filter is optional.

DRAIN PAN

The drain pan fits a drain pipe of 3/4" (on both left and right side of drain pan) and is fitted with fire resistant insulation.

VHB CONTROL OPTIONS

COMPLETE CONTROL (M-TYPE)

The PCB (printed circuit board) microprocessor control board relays control of the operation of the indoor-fan motor, water valves (ON/OFF or modulating) and electric heater (if fitted), to maintain room conditions at a user-defined set point. Temperature settings, fan speeds and other control functions can be changed by the infrared handset or wired wall pad *(Not currently available in North America)*.

STANDARD CONTROL (T-TYPE)

It is suitable for connecting with an external 24 V AC thermostat. When G2/G1/G0 is powered ON or motor modulating signal is over 20 V DC, the unit is turned ON. When all G2, G1 and G0 are powered OFF or motor modulating signal is less than 20 V DC, unit is turned OFF. The condensate pump (if fitted) will run continuously, as long as coil temperature is less than 59°F. Alarm notification and zone control function are available. 40 V AC (output 24 V AC) transformer is used to supply 24 V AC power to thermostat and modulating valve.

GENERAL SPECIFICATIONS

VHB - 3 ROW, 2 PIPE, HORIZONTAL DUCTED, HIGH STATIC UNITS

VHB - 3 ROW - [SIZE]					1000	1200	1600	1800	2400
UNIT CONFIGURATION		CONFIGURATION			2-PIPE				
		NUMBER OF FAN BLOWERS			TWIN				
		POWER SUPPLY		V/PH/HZ	220/1/60				
		OPERATION CONTROL			~M: Complete Control				
					~T: Standard Control				
PERFORMANCE DATA	AIR	TOTAL AIR FLOW	H	CFM	932	1012	1831	1914	2412
			M		752	923	1618	1654	2083
			L		465	697	1127	1246	1657
		EXTERNAL STATIC PRESSURE	H	IN.WG	0.4	0.4	0.4	0.4	0.4
			M		0.4	0.4	0.4	0.4	0.4
			L		0.4	0.4	0.4	0.4	0.4
	COOLING	COOLING CAPACITY	H	BTU/Hr	24216	25803	45726	51654	64915
			M		20569	24050	41344	46197	57735
			L		14167	19366	31461	36967	48473
		SENSIBLE COOLING CAPACITY	H		17072	18259	32899	35074	44507
			M		14333	16950	29615	31170	39146
			L		9685	13428	22138	24722	32611
	HEATING	HEATING CAPACITY	H	BTU/Hr	37644	40113	71083	80299	100913
			M		31976	37387	64272	71815	89752
			L		22023	30105	48908	57467	75353
		MAX ELECTRIC HEATER CAPACITY @ 220V		kW	6		9		
	SOUND	SOUND PRESSURE LEVEL		dB(A)	57/53/47	60/57/54	63/61/57	59/57/55	62/60/58
		SOUND PRESSURE LEVEL (INLET)			57/53/47	60/57/54	63/61/57	59/57/55	62/60/58
		SOUND POWER LEVEL (OUTLET)			66/62/56	69/66/63	72/70/66	68/66/64	71/69/67
		SOUND POWER LEVEL (INLET +RADIATED)			66/62/56	69/66/63	72/70/66	68/66/64	71/69/67
	ELECTRICAL	FAN MOTOR POWER	H	W	276	384	525	461	540
			M		244	347	453	356	520
			L		140	240	265	278	329
		FAN MOTOR RUNNING CURRENT @ 220V	H	A	2.51	3.49	4.77	4.19	4.91
	HYDRAULIC	COOLING WATER FLOW RATE	H	GPM	4.78	5.10	9.03	10.2	12.82
			M		4.06	4.75	8.16	9.12	11.4
			L		2.8	3.82	6.21	7.3	9.57
		COOLING PRESSURE DROP	H	FT.WG	4.5	5.1	5.0	5.9	6.3
			M		3.4	4.5	4.2	4.9	5.2
			L		1.8	3.1	2.6	3.4	3.8
		HEATING WATER FLOW RATE		GPM	Same as cooling mode				
		HEATING PRESSURE DROP	H	FT.WG	4.1	4.6	4.5	5.3	5.7
			M		3.1	4.0	3.8	4.4	4.6
			L		1.6	2.8	2.4	3.0	3.4
		WATER CONTENT		GAL	0.45	0.51	0.76	1.02	1.25
CONSTRUCTION AND PACKING DATA		WATER CONNECTIONS	Type		Socket (NPT Threaded)				
			In	INCH	NPT3/4			NPT1	
			Out		NPT3/4			NPT1	
		CONDENSATE DRAINAGE CONNECTION			3/4				
		DIMENSIONS	L	INCH	39 3/4	43 11/16	57 1/2	57 1/2	69 5/16
			W		24 13/16	24 13/16	25 9/16	29 1/2	29 1/2
			H		11 13/16	11 13/16	14 15/16	16 15/16	16 15/16
		NET WEIGHT		LBS	99	110	128	143	165

NOTES

1. Rated in accordance with AHRI standard 440.
2. Cooling conditions
   - Return air temperature: DB 80°F/WB 67°F.
   - Inlet/ outlet water temperature: 45/55°F.
3. Heating conditions (2-pipe)
   - Return air temperature: 70°F.
   - Inlet water temperature: 160°F.
   - Water flow-rate: Same as cooling mode

All dimensions are approximate and within 1/16 of an inch of those indicated.

VHB - 4 ROW, 2 PIPE, HORIZONTAL DUCTED, HIGH STATIC UNITS

VHB - 4 ROW - [SIZE]					1000	1200	1600	1800	2400
UNIT CONFIGURATION	CONFIGURATION				2-PIPE				
	NUMBER OF FAN BLOWERS				TWIN				
	POWER SUPPLY			V/PH/HZ	220/1/60				
	OPERATION CONTROL				-M: Complete Control				
					-T: Standard Control				
PERFORMANCE DATA – AIR	TOTAL AIR FLOW	H		CFM	1010	1076	1881	1914	2412
		M			838	987	1707	1654	2083
		L			571	767	1232	1246	1657
	EXTERNAL STATIC PRESSURE	H		IN.WG	0.3	0.3	0.3	0.3	0.3
		M			0.3	0.3	0.3	0.3	0.3
		L			0.3	0.3	0.3	0.3	0.3
COOLING	COOLING CAPACITY	H		BTU/Hr	20109	21987	37387	42557	52111
		M			17379	20436	34756	38720	47241
		L			12953	16923	27030	32361	40557
	SENSIBLE COOLING CAPACITY	H			16154	17566	29920	33532	41366
		M			13783	16201	27724	30262	37214
		L			10132	13310	21191	25140	31606
HEATING	HEATING CAPACITY	H		BTU/Hr	40292	44055	74912	85269	104413
		M			34822	40948	69640	77582	94655
		L			25953	33908	54158	64842	81263
	MAX ELECTRIC HEATER CAPACITY @ 220V			kW	6		9		
SOUND	SOUND PRESSURE LEVEL			dB(A)	57/53/47	60/57/54	63/61/57	59/57/55	62/60/58
	SOUND PRESSURE LEVEL (INLET + RADIATED)				57/53/47	60/57/54	63/61/57	59/57/55	62/60/58
	SOUND POWER LEVEL (OUTLET)				66/62/56	69/66/63	72/70/66	68/66/64	71/69/67
	SOUND POWER LEVEL (INLET + RADIATED)				66/62/56	69/66/63	72/70/66	68/66/64	71/69/67
ELECTRICAL	FAN MOTOR POWER	H		W	276	384	525	461	540
		M			244	347	453	356	520
		L			140	240	265	278	329
	FAN MOTOR RUNNING CURRENT @ 220V	H		A	2.51	3.49	4.77	4.19	4.91
HYDRAULIC	COOLING WATER FLOW RATE	H		GPM	2.5	2.73	4.65	5.29	6.48
		M			2.16	2.54	4.32	4.81	5.87
		L			1.61	2.1	3.36	4.02	5.04
	COOLING PRESSURE DROP	H		FT.WG	1.4	1.8	2.9	2.6	2.7
		M			1.1	1.6	2.6	2.2	2.3
		L			0.7	1.2	1.7	1.7	1.8
	HEATING WATER FLOW RATE			GPM	Same as cooling mode				
	HEATING PRESSURE DROP	H		FT.WG	1.3	1.7	2.6	2.4	2.4
		M			1	1.5	2.3	2	2
		L			0.6	1.1	1.5	1.5	1.6
	WATER CONTENT			GAL	0.61	0.68	1.02	1.36	1.67
CONSTRUCTION AND PACKING DATA	WATER CONNECTIONS	TYPE			Socket (NPT Threaded)				
		IN		INCH	NPT3/4			NPT1	
		OUT							
	CONDENSATE DRAINAGE CONNECTION				3/4				
	DIMENSIONS	L		INCH	39 3/4	43 11/16	57 1/2	57 1/2	69 5/16
		W			24 13/16	24 13/16	25 9/16	29 1/2	29 1/2
		H			11 13/16	11 13/16	14 15/16	16 15/16	16 15/16
	NET WEIGHT			LBS	99	110	127.6	143	165

NOTES

1. Cooling conditions (2-pipe or 4-pipe)
   - Return air temperature: DB 80°F/WB 67°F.
   - Inlet/ outlet water temperature: 45/55°F.
2. Heating conditions (2-pipe)
   - Return air temperature: 70°F.
   - Inlet water temperature: 160°F.
   - Water flow-rate: Same as cooling mode

All dimensions are approximate and within 1/16 of an inch of those indicated.

VHB - 6 ROW, 2 PIPE, HORIZONTAL DUCTED HIGH STATIC UNITS

VHB(6R)-[Size]-V~-AECM					1000	1200	1600	1800	2400
UNIT CONFIGURATION	CONFIGURATION				2-PIPE				
	NUMBER OF FAN BLOWERS				TWIN				
	POWER SUPPLY			V/PH/HZ	220/1/60				
	Operation Control				~M: Complete Control				
					~T: Standard Control				
PERFORMANCE DATA / AIR	TOTAL AIR FLOW	H		CFM	905	990	1814	1879	2386
		M			723	901	1587	1609	2045
		L			429	673	1091	1189	1612
	EXTERNAL STATIC PRESSURE	H		IN.WG	0.3	0.3	0.3	0.3	0.3
		M			0.3	0.3	0.3	0.3	0.3
		L			0.3	0.3	0.3	0.3	0.3
COOLING	COOLING CAPACITY	H		BTU/Hr	23653	26173	45972	50457	63891
		M			19759	24352	41644	44987	56747
		L			13124	19232	31150	35276	46991
	SENSIBLE COOLING CAPACITY	H			18236	20119	35665	38598	49144
		M			15124	18627	32041	34221	43156
		L			9814	14598	23630	26497	35456
HEATING	HEATING CAPACITY	H		BTU/Hr	47392	52443	92112	101098	128016
		M			39591	48794	83442	90138	113703
		L			26296	38534	62415	70681	94154
	MAX ELECTRIC HEATER CAPACITY @ 220V			kW	6		9		
SOUND	SOUND PRESSURE LEVEL			dB(A)	57/53/47	60/57/54	63/61/57	59/57/55	62/60/58
	SOUND PRESSURE LEVEL (INLET + RADIATED)				57/53/47	60/57/54	63/61/57	59/57/55	62/60/58
	SOUND POWER LEVEL (OUTLET)				66/62/56	69/66/63	72/70/66	68/66/64	71/69/67
	SOUND POWER LEVEL (INLET + RADIATED)				66/62/56	69/66/63	72/70/66	68/66/64	71/69/67
ELECTRICAL	FAN MOTOR POWER	H		W	276	384	525	461	540
		M			244	347	453	356	520
		L			140	240	265	278	329
	FAN MOTOR RUNNING CURRENT @ 220V	H		A	2.51	3.49	4.77	4.19	4.91
HYDRAULIC	COOLING WATER FLOW RATE	H		GPM	2.94	3.25	5.71	6.27	7.94
		M			2.46	3.03	5.17	5.59	7.05
		L			1.63	2.39	3.87	4.38	5.84
	COOLING PRESSURE DROP	H		FT.WG	2.9	3.7	6.2	5.3	9.4
		M			2.1	3.3	5.3	4.4	7.7
		L			1.1	2.2	3.2	2.9	5.6
	HEATING WATER FLOW RATE			GPM	Same as cooling mode				
	HEATING PRESSURE DROP	H		FT.WG	2.6	3.4	5.6	4.8	8.5
		M			1.9	3.0	4.7	4.0	7.0
		L			1.0	2.0	2.9	2.6	5.0
	WATER CONTENT			GAL	0.9	1.0	1.5	2.0	2.5
CONSTRUCTION AND PACKING DATA	WATER CONNECTIONS	TYPE			Socket (NPT Threaded)				
		IN		INCH	NPT3/4			NPT1	
		OUT							
	CONDENSATE DRAINAGE CONNECTION			INCH	3/4				
	DIMENSIONS	L		INCH	39 3/4	43 11/16	57 1/2	57 1/2	69 5/16
		W			24 13/16	24 13/16	25 9/16	29 1/2	29 1/2
		H			11 13/16	11 13/16	14 15/16	16 15/16	16 15/16
	NET WEIGHT			LBS	99	110	127.6	143	165

NOTES

1. Cooling conditions (2-pipe or 4-pipe)
   - Return air temperature: DB 80°F/WB 67°F.
   - Inlet/ outlet water temperature: 45/55°F.
2. Heating conditions (2-pipe)
   - Return air temperature: 70°F.
   - Inlet water temperature: 160°F.
   - Water flow-rate: Same as cooling mode

All dimensions are approximate and within 1/16 of an inch of those indicated.

VHB - 4+2 ROW, 4 PIPE, HORIZONTAL DUCTED, HIGH STATIC UNITS

VHB - 4+2 ROW - [SIZE]					1000	1200	1600	1800	2400
UNIT CONFIGURATION		CONFIGURATION			4-PIPE				
		NUMBER OF FAN BLOWERS			TWIN				
		POWER SUPPLY		V/PH/HZ	220/1/60				
		OPERATION CONTROL			~M: Complete Control				
					~T: Standard Control				
PERFORMANCE DATA	AIR	TOTAL AIR FLOW	H	CFM	984	1055	1864	1982	2464
			M		809	966	1678	1743	2157
			L		536	744	1197	1359	1745
		EXTERNAL STATIC PRESSURE	H	IN.WG	0.24	0.24	0.24	0.24	0.24
			M		0.24	0.24	0.24	0.24	0.24
			L		0.24	0.24	0.24	0.24	0.24
	COOLING	COOLING CAPACITY	H	BTU/Hr	30774	33599	57587	64899	80226
			M		26480	31442	53098	58899	72674
			L		19294	25655	41026	48330	61607
		SENSIBLE COOLING CAPACITY	H		20822	22640	39009	43259	53914
			M		17712	21049	35800	38966	48436
			L		12676	17035	27220	31779	40639
	HEATING	HEATING CAPACITY	H	BTU/Hr	38254	41272	70583	79110	98033
			M		32685	38632	64920	71269	88942
			L		23664	31419	49963	58387	75168
	SOUND	SOUND PRESSURE LEVEL		dB(A)	57/53/47	60/57/54	63/61/57	59/57/55	62/60/58
		SOUND PRESSURE LEVEL (INLET + RADIATED)			57/53/47	60/57/54	63/61/57	59/57/55	62/60/58
		SOUND POWER LEVEL (OUTLET)			66/62/56	69/66/63	72/70/66	68/66/64	71/69/67
		SOUND POWER LEVEL (INLET + RADIATED)			66/62/56	69/66/63	72/70/66	68/66/64	71/69/67
	ELECTRICAL	FAN MOTOR POWER	H	W	276	384	525	461	540
			M		244	347	453	356	520
			L		140	240	265	278	329
		FAN MOTOR RUNNING CURRENT @ 220V	H	A	2.51	3.49	4.77	4.19	4.91
	HYDRAULIC	COOLING WATER FLOW RATE	H	GPM	6.08	6.63	11.37	12.82	15.84
			M		5.23	6.21	10.49	11.63	14.35
			L		3.81	5.07	8.1	9.54	12.17
		COOLING PRESSURE DROP	H	FT.WG	6.5	8.2	13.1	11.7	12.1
			M		5.0	7.3	11.4	9.9	10.3
			L		2.9	5.2	7.4	7.1	7.7
		HEATING WATER FLOW RATE	H	GPM	1.91	2.06	3.52	3.94	4.88
			M		1.63	1.92	3.23	3.55	4.43
			L		1.18	1.57	2.49	2.91	3.74
		HEATING PRESSURE DROP	H	FT.WG	2.4	3.0	4.9	2.6	4.5
			M		1.9	2.7	4.3	2.2	3.8
			L		1.1	1.9	2.7	1.6	2.9
		WATER CONTENT		GAL	0.61	0.68	1.02	1.36	1.67
		HEATING WATER CONTENT			0.3	0.34	0.51	0.68	0.84
CONSTRUCTION AND PACKING DATA		WATER CONNECTIONS	TYPE		Socket (NPT Threaded)				
			IN	INCH	NPT3/4			NPT1	
			OUT						
		CONDENSATE DRAINAGE CONNECTION			3/4				
		DIMENSIONS	L	INCH	39 3/4	43 11/16	57 1/2	57 1/2	69 5/16
			W		24 13/16	24 13/16	25 9/16	29 1/2	29 1/2
			H		11 13/16	11 13/16	14 15/16	16 15/16	16 15/16
		NET WEIGHT		LBS	99	110	128	143	165

NOTES

1. Cooling conditions (2-pipe or 4-pipe)
   - Return air temperature: DB 80°F/WB 67°F.
   - Inlet/ outlet water temperature: 45/55°F.

2. Heating conditions (2-pipe)
   - Return air temperature: 70°F.
   - Inlet/Outlet Water Temperature: 180/140°F.
   - Water flow-rate: Same as cooling mode

All dimensions are approximate and within 1/16 of an inch of those indicated.

DIMENSION DRAWINGS

DIMENSIONS FOR VHB - 2 PIPE

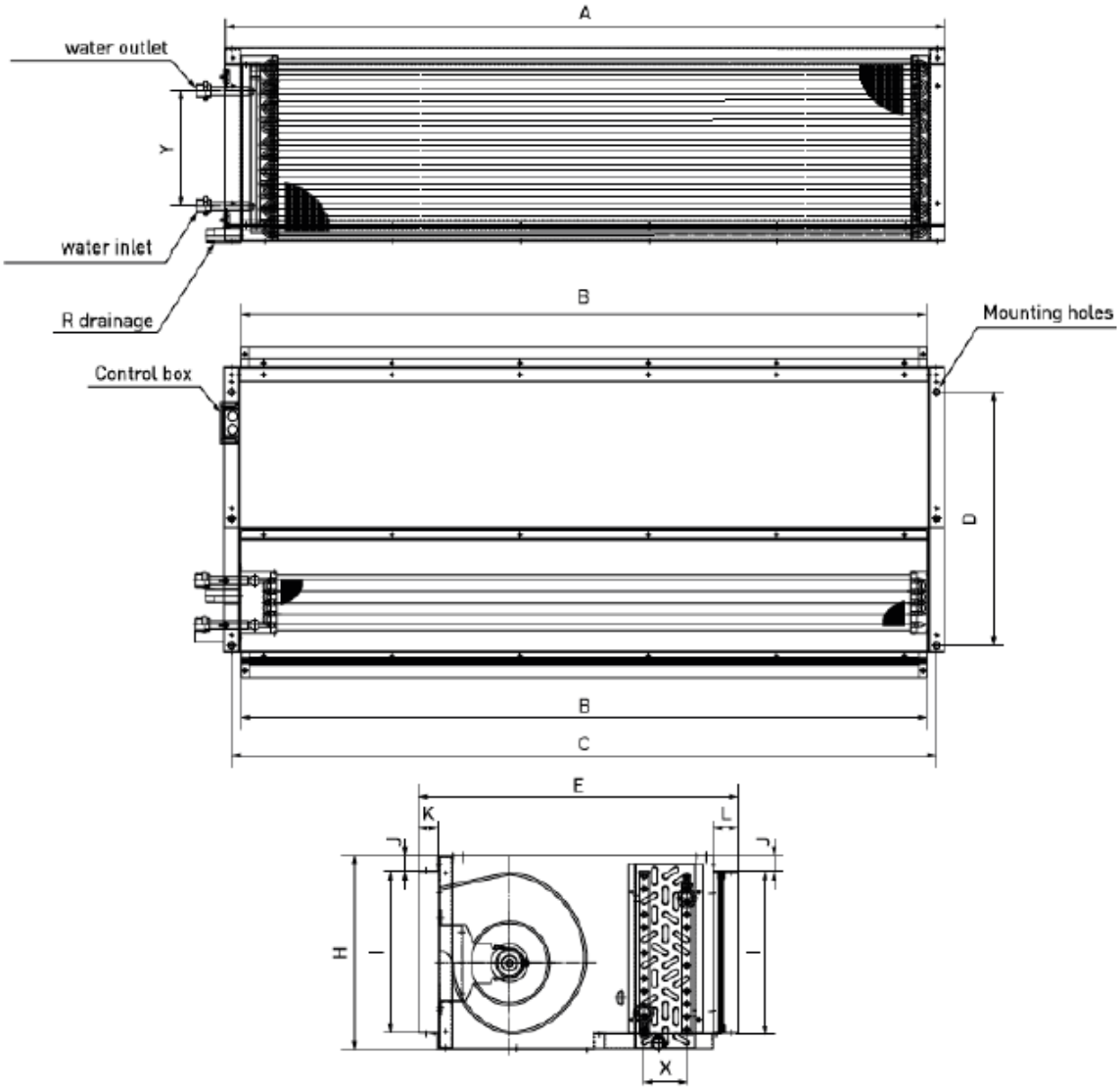

MODEL	A	B	C	D	E	F	G	H
VHB-1000	39 3/4	37 1/16	38 9/16	18 11/16	24 13/16	Φ/16	11 13/16	9 13/16
VHB-1200	43 11/16	41	42 1/2	18 11/16	24 13/16	Φ/16	11 13/16	9 13/16
VHB-1600	57 1/2	54 13/16	56 5/16	19 1/2	25 9/16	Φ/16	14 15/16	9 13/16
VHB-1800	57 1/2	54 13/16	56 5/16	23 7/16	29 1/2	Φ/16	16 15/16	9 13/16
VHB-2400	69 5/16	66 5/8	68 1/8	23 7/16	29 1/2	Φ/16	16 15/16	9 13/16

MODEL	I	J	K	L	X(3R)	X(4R)	X(6R)	Y	R
VHB-1000	9 7/16	1 3/16	1 9/16	2	1 11/16	2 9/16	3 7/16	5 15/16	3/4
VHB-1200	9 7/16	1 3/16	1 9/16	2	1 11/16	2 9/16	3 7/16	5 15/16	3/4
VHB-1600	12 5/8	1 3/16	1 9/16	2	1 11/16	2 9/16	3 7/16	8 7/8	3/4
VHB-1800	14 9/16	1 3/16	1 9/16	2	1 11/16	2 9/16	3 7/16	10 13/16	1
VHB-2400	14 9/16	1 3/16	1 9/16	2	1 11/16	2 9/16	3 7/16	10 13/16	1

All dimensions are approximate and within 1/16 of an inch of those indicated.

DIMENSIONS FOR VHB - 4 PIPE

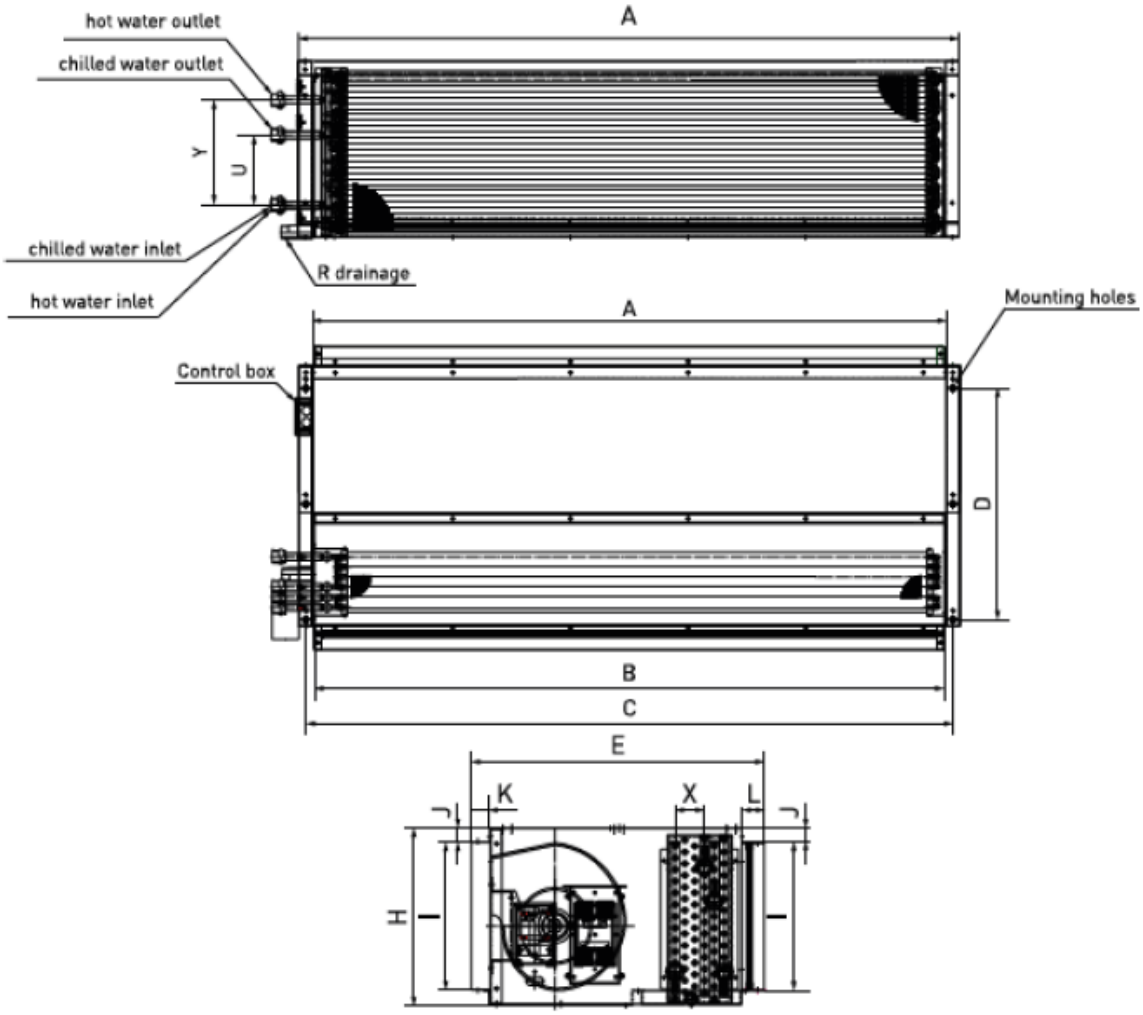

MODEL	A	B	C	D	E	G	H	I
VHB-1000	39 3/4	37 1/16	38 9/16	18 11/16	24 13/16	9/16	11 13/16	9 7/16
VHB-1200	43 11/16	41	42 1/2	18 11/16	24 13/16	9/16	11 13/16	9 7/16
VHB-1600	57 1/2	54 13/16	56 5/16	19 1/2	25 9/16	9/16	14 15/16	12 5/8
VHB-1800	57 1/2	54 13/16	56 5/16	23 7/16	29 1/2	9/16	16 15/16	14 9/16
VHB-2400	69 5/16	66 5/8	68 1/8	23 7/16	29 1/2	9/16	16 15/16	14 9/16

MODEL	J	K	L	X	Y	U	R
VHB-1000	1 3/16	1 9/16	2	2 9/16	5 15/16	3 1/8	3/4
VHB-1200	1 3/16	1 9/16	2	2 9/16	5 15/16	3 1/8	3/4
VHB-1600	1 3/16	1 9/16	2	2 9/16	8 7/8	5 15/16	3/4
VHB-1800	1 3/16	1 9/16	2	2 9/16	10 13/16	7 7/8	1
VHB-2400	1 3/16	1 9/16	2	2 9/16	10 13/16	7 7/8	1

All dimensions are approximate and within 1/16 of an inch of those indicated.

OPTIONAL ACCESSORIES

UNIT ACCESSORIES

Electrical Heaters
The electric heater module is supplied for winter heating as an alternative to the auxiliary hot water coil. We offer a complete range of electric heater kits, which are easy to connect to the control box with a mounting fixture. The electric heater configuration is selectable by DIP switch on the internal control board.

Valves & Actuator
2-way or 3-way valve with motorized 24V on/off or modulating actuator integrated with SS hose and copper piping connection kits.

Insulation For Sound Attenuation
0.2, 0.4 or 0.6 inches NBR material insulation for sound attenuation.

Stainless Steel Drain Pan

CONTROL ACCESSORIES

Complete Control Board

Infra-Red Handset Controller & Wall Holder *(Currently not available in North America)*
With Global Control functionality for Main and Secondary unit groups.

Unlimited Wired Wall Pad Controller *(Currently not available in North America)*
Features: 7 day ON/OFF timer program. Addressable Main and Secondary units allowing control of up to 32 Secondary units via a single Main Unit with set or check of each unit parameters individually. Error display with addressable error diagnostic (Main unit Wall Pad displays Secondary unit address and error type). One Touch Global Control (Global Control Main Unit Wall Pad controls all units in the group). Complete with Onboard Room Air Temperature Sensor.

DIP Switch Configuration Service
Pre-set DIP switches for master/slave option, 2/4-pipe, Preheat temperature, Operation mode settings.

ABS External LED Receiver
IR receiver in ABS housing with up to 70in length prewiring. LED lights show working mode or error code.

Standard Control Board

Universal EC Thermostat
Main functions: 2-pipe, 4-pipe, 2-pipe+floor heating mode, floor heating, and cooling. AC/EC motor 3-speed control. Motorized valve control. 0-10 VDC Modulating valve. EC motor RPM control. Low temperature protection. Remote ON/OFF function. Power supply: 24 Vac or VDC. Working environment: 32-122, 5-95%RH (no condensate). Self-power consumption: <2W. Protection class: IP30.

STCD Series Thermostats

VERANO®

BY MDL SOLUTIONS

COMPACT LOWER VOLTAGE FAN COILS AND HYDRONIC HEAT | MDLSOLN.COM

MDL SOLUTIONS
2275 UPPER MIDDLE RD E #101
OAKVILLE, ON L6H 0C3
CANADA
tel. 1 289 799-3414
www.mdlsoln.com

VHB-CA-05-2022